SPEC SHEET

PRO-FLO SHIFT
PROGRESSIVE PUMP TECHNOLOGY

PS800 PLASTIC PUMP

51 mm (2") Pump Maximum Flow Rate: 709 lpm (187 gpm)

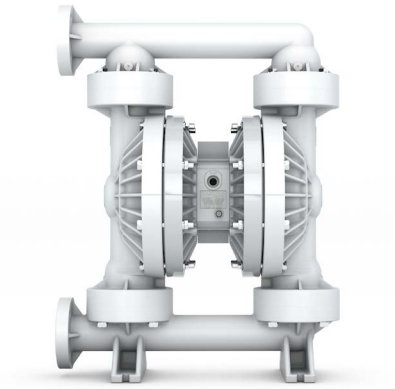

PS800 PLASTIC

DIMENSIONAL DRAWING

PS800 Polypropylene

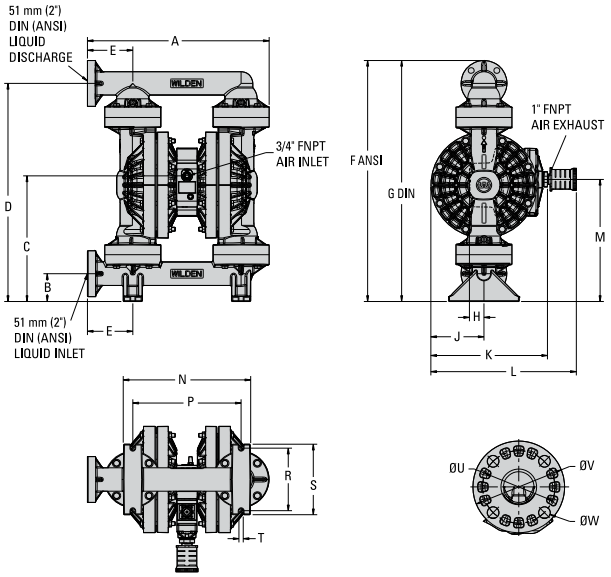

Click button to view Dimensional Drawing ➔ PS800 POLYPROPYLENE | PS800 POLYPROPYLENE (CENTER-PORTED)

DIMENSIONS

ITEM	METRIC (mm)	STANDARD (inch)
A	604	23.8
B	92	3.6
C	417	16.4
D	724	28.5
E	151	5.9
F	801	31.5
G	807	31.8
H	48	1.9
J	177	7.0
K	387	15.3
L	480	18.9
M	405	16.0
N	423	16.7
P	360	14.2
R	208	8.2
S	234	9.2
T	14	0.6
DIN FLANGE		
U	125 DIA.	4.9 DIA.
V	165 DIA.	6.5 DIA.
W	18 DIA.	0.7 DIA.
ANSI FLANGE		
U	121 DIA.	4.8 DIA.
V	152 DIA.	6.0 DIA.
W	19 DIA.	0.8 DIA.

LW0199 REV. B

PS800 PVDF

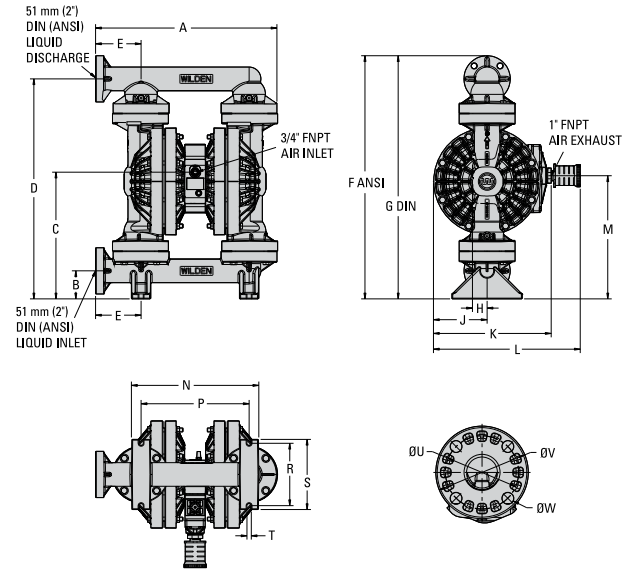

Click button to view Dimensional Drawing ➔ PS800 PVDF | PS800 PVDF (CENTER-PORTED)

DIMENSIONS

ITEM	METRIC (mm)	STANDARD (inch)
A	597	23.5
B	92	3.6
C	417	16.4
D	724	28.5
E	151	5.9
F	801	31.5
G	807	31.8
H	48	1.9
J	177	7.0
K	387	15.3
L	480	18.9
M	405	16.0
N	419	16.5
P	356	14.0
R	205	8.1
S	231	9.1
T	14	0.6
DIN FLANGE		
U	125 DIA.	4.9 DIA.
V	165 DIA.	6.5 DIA.
W	18 DIA.	0.7 DIA.
ANSI FLANGE		
U	121 DIA.	4.8 DIA.
V	152 DIA.	6.0 DIA.
W	19 DIA.	0.8 DIA.

LW0200 REV. B

PUMP DATA

Specifications:

Ship Weight.....Polypropylene 40 kg (89 lb)
PVDF 52 kg (115 lb)
Conductive Polypropylene 41 kg (91 lb)
Conductive PVDF 56 kg (116 lb)
Air Inlet ..... 3/4"
Liquid Inlet..... 51 mm (2")
Liquid Outlet..... 51 mm (2")

WILDEN®

22069 Van Buren Street
Grand Terrace, CA 92313-5607 USA

O: +1 (909) 422-1730 F: +1 (909) 783-3440
www.psgdover.com

PSG® a DOVER company
psgdover.com

PERFORMANCE

PS800 PLASTIC EZ-INSTALL TPE-FITTED

Max. Flow Rate.....700 lpm (185 gpm)
Max. Inlet Pressure .....8.6 bar (125 psig)
Max. Solids Passage..... 6.4 mm (1/4")
Max. Suction Lift .....5.9 m Dry (19.3')
8.3 m Wet (27.2')

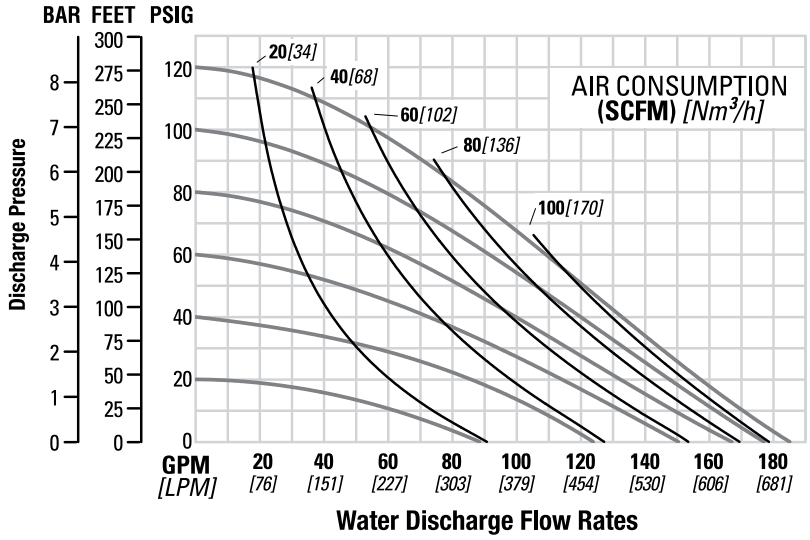

Click button to view Performance Curve ➔ EZ-INSTALL TPE-FITTED | RUBBER-FITTED

PS800 PLASTIC FULL-STROKE PTFE-FITTED

Max. Flow Rate.....654 lpm (173 gpm)
Max. Inlet Pressure .....8.6 bar (125 psig)
Max. Solids Passage..... 6.4 mm (1/4")
Max. Suction Lift .....5.7 m Dry (18.7')
8.3 m Wet (27.2')

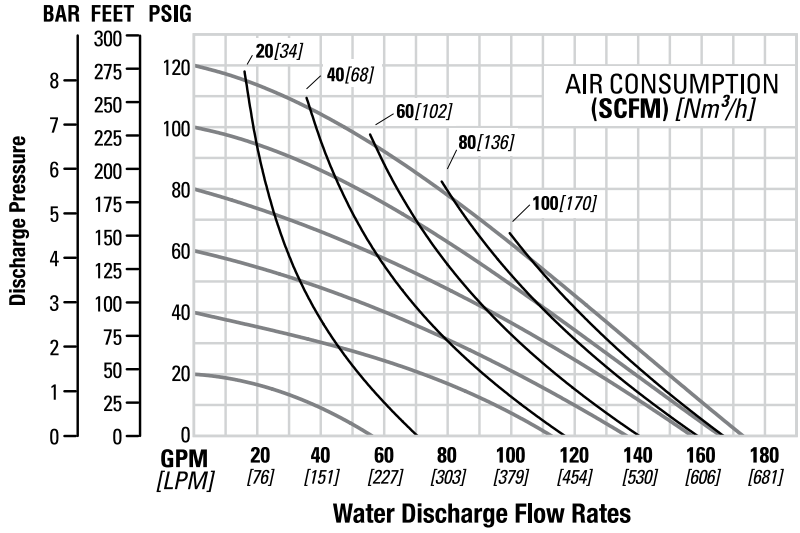

WILDEN®
22069 Van Buren Street
Grand Terrace, CA 92313-5607 USA
O: +1 (909) 422-1730 F: +1 (909) 783-3440
www.psgdover.com
PSG a DOVER company
psgdover.com