EOM

ENGINEERING OPERATION
& MAINTENANCE MANUAL

Equalizer®
Surge Dampeners

Integrated SD Series (ISD) Metal

Models: ISD220, ISD420, ISD820, and ISD1520/ISD1530

PSG a DOVER company

Where Innovation Flows

WILDEN®

WIL-19013-E-03

Copyright
Copyright 2021 PSG®, a Dover Company. All rights reserved.

PSG reserves the right to modify the information and illustrations in this document without prior notice. The product described in this document is furnished under a license agreement or nondisclosure agreement. No part of this document may be reproduced, stored in a retrieval system, or transmitted in any form or any means electronic or mechanical, including photocopying and recording, without the written permission of PSG, a Dover Company, except as described by the terms of those agreements.

This is a non-contractual document.

Trademarks
PSG and the PSG logo are registered trademarks of PSG. Wilden® is a registered trademark of PSG California LLC. Pro-Flo® SHIFT, Pro-Flo®, and Wil-Flex® are registered trademarks of PSG California LLC. Chem-Fuse™, Pure-Fuse™, Saniflex™, and Bunalast™ are trademarks of PSG California LLC.

All trademarks, names, logos and service marks (collectively “trademarks”) in this document are registered and unregistered trademarks of their respective owners. Nothing contained in this document should be construed as granting any license or right to use any trademark without the prior written permission of the trademark owner.

Warranty
Each and every product manufactured by Wilden is built to meet the highest standards of quality. Every pump is functionally tested to ensure integrity of operation. Wilden warrants that pumps, accessories and parts manufactured or supplied by it to be free from defects in material and workmanship for a period of five (5) years from date of installation or six (6) years from date of manufacture, whichever comes first.

For more information, and to register your Wilden pump for warranty, please visit https://www.psgdover.com/wilden/support/warranty-registration.

Certifications

CONTENTS

SECTION 1: Precautions – Read First! **4**
SECTION 2: Wilden Designation System **5**
SECTION 3: Dimensional Drawings **6**
ISD220 6
ISD420 6
ISD820 7
ISD1520 7
ISD1530 8
SECTION 4: Performance **9**
ISD220 9
ISD420 10
ISD820 11
ISD1520 12
SECTION 5: Suggested Installation, Operation, Maintenance, and Troubleshooting **13**
SECTION 6: Disassembly/Reassembly **14**
SECTION 7: Exploded View and Parts List **19**

SECTION 1

PRECAUTIONS – READ FIRST!

WARNING: Always wear safety glasses when operating a pump and/or surge dampener to avoid eye injury. If diaphragm rupture occurs, material being pumped may be forced out of the air exhaust.

CAUTION: Do not apply compressed air to the exhaust port – pump will not function.

CAUTION: Do not exceed 8.6 bar (125 psig) air supply pressure.

TEMPERATURE LIMITS:
PTFE with BUNA-N-backed 4°C to 82°C (40°F to 180°F)

CAUTION: When choosing dampener materials, be sure to check the temperature limits for all wetted components.

CAUTION: Maximum temperature limits are based upon mechanical stress only. Certain chemicals will significantly reduce maximum safe operating temperatures. Consult the Chemical Resistance Guide for chemical compatibility and temperature limits.

WARNING: Prevent static sparking. If static sparking occurs, fire or explosion could result. Pump, valves and containers must be grounded to a proper grounding point when handling flammable fluids and whenever discharge of static electricity is a hazard.

CAUTION: The process fluid and cleaning fluids must be compatible chemically with all wetted pump components.

CAUTION: Dampener(s) should be thoroughly flushed before installing into process lines.

CAUTION: Before any maintenance or repair is attempted, the compressed air line to the dampener and pump should be disconnected and all air pressure allowed to bleed from system. Disconnect all intake, discharge and air lines. Drain the dampener and allowing any fluid to flow into a suitable container.

CAUTION: Before attaching the air line to the pump, blow out the air line for 10 to 20 seconds to make sure all pipeline debris is clear. Use an in-line air filter. A 5µ (micron) air filter is recommended.

CAUTION: Dampeners cannot be used in submersible applications.

CAUTION: Before installation, tighten all hardware.

NOTE: The Safety Supplement document is a part of the manual. Please refer to the Safety Supplement document for a complete list of safety considerations including considerations for safe operation and maintenance of pumps marked for ATEX environments before starting the pump.

WARNING: This product can expose you to chemicals including Nickel Chromium, Cadmium, or Cobalt, which are known to the State of California to cause cancer and/or birth defects or other reproductive harm.
For more information, go to www.P65Warnings.ca.gov.

WILDEN DESIGNATION SYSTEM

EQUALIZER® SURGE DAMPENER

INTEGRATED SD SERIES (ISD)

LEGEND XI SD / XXXX / SZ SS / TBL

- XI SD — MODEL
- XXXX — SIZE
- SZ — WETTED PATH
- SS — AIR CHAMBER AND AIR VALVE
- TBL — DIAPHRAGMS

MATERIAL CODES

MODEL
XISD = ATEX INTEGRATED SURGE DAMPENER

SIZE
220 = 25 MM (1") THREADED PORT
420 = 38 MM (1-1/2") THREADED PORT
820 = 51 MM (2") THREADED PORT
1520 = 76 MM (3") THREADED PORT
1530 = 76 MM (3") FLANGED PORT

WETTED PATH
SZ = STAINLESS STEEL/ NOT APPLICABLE

AIR CHAMBER AND AIR VALVE
SS = 316 STAINLESS STEEL

DIAPHRAGMS
TBL = PTFE w/BUNA-N BACK-UP, IPD

SPECIALTY CODES

0014 = BSPT
0504 = DIN

! **NOTE:** Most elastomeric materials use colored dots for identification

DIMENSIONAL DRAWING

ISD220

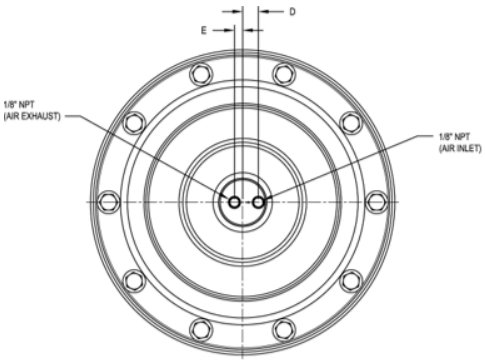

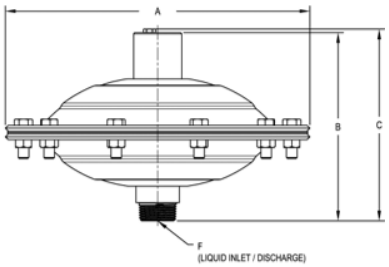

DIMENSIONS

ITEM	METRIC (mm)	STANDARD (inch)
A	274 DIA.	10.8 DIA.
B	169	6.7
C	172	6.8
D	14	.6
E	7	.3
F	1" BSPT (NPT)	1" BSPT (NPT)
Weight	7.26 kg	16 lbs

LW0498 REV. C

ISD420

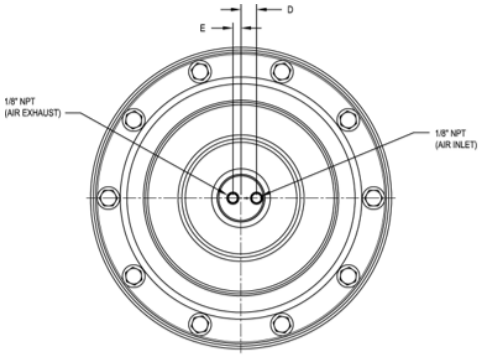

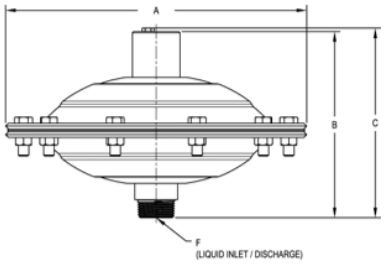

DIMENSIONS

ITEM	METRIC (mm)	STANDARD (inch)
A	361 DIA.	14.2 DIA.
B	220	8.7
C	224	8.8
D	14	.6
E	7	.3
F	1-1/2" BSPT (NPT)	1-1/2" BSPT (NPT)
Weight	13.60 kg	30 lbs

LW0498 REV. C

DIMENSIONAL DRAWING

ISD820

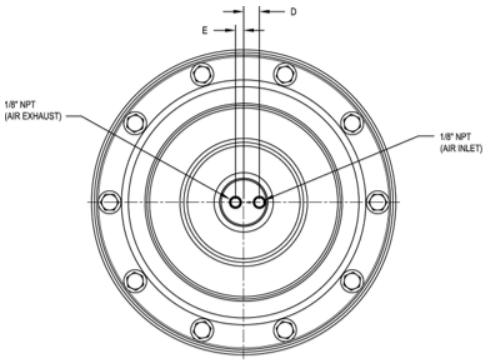

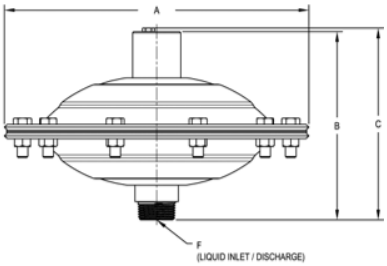

DIMENSIONS

ITEM	METRIC (mm)	STANDARD (inch)
A	361 DIA.	14.2 DIA.
B	220	8.7
C	224	8.8
D	14	.6
E	7	.3
F	2" BSPT (NPT)	2" BSPT (NPT)
Weight	13.60 kg	30 lbs

LW0498 REV. C

ISD1520

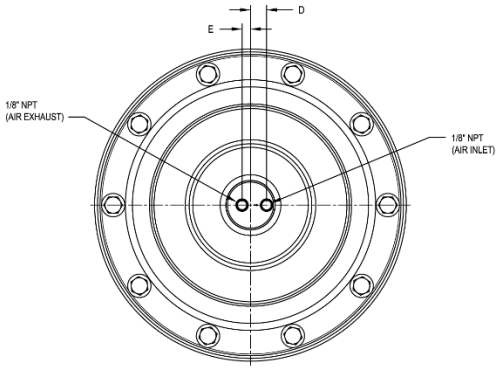

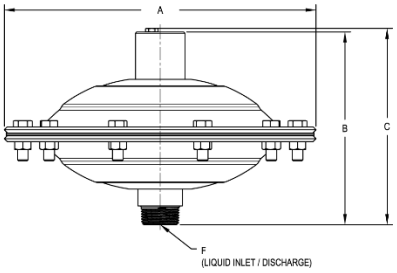

DIMENSIONS

ITEM	METRIC (mm)	STANDARD (inch)
A	474 DIA.	18.7 DIA.
B	333	13.1
C	340	13.4
D	19	.7
E	N/A	N/A
F	3" BSPT (NPT)	3" BSPT (NPT)
Weight	27.22 kg	60 lbs

LW0498 REV. C

DIMENSIONAL DRAWING

ISD1530

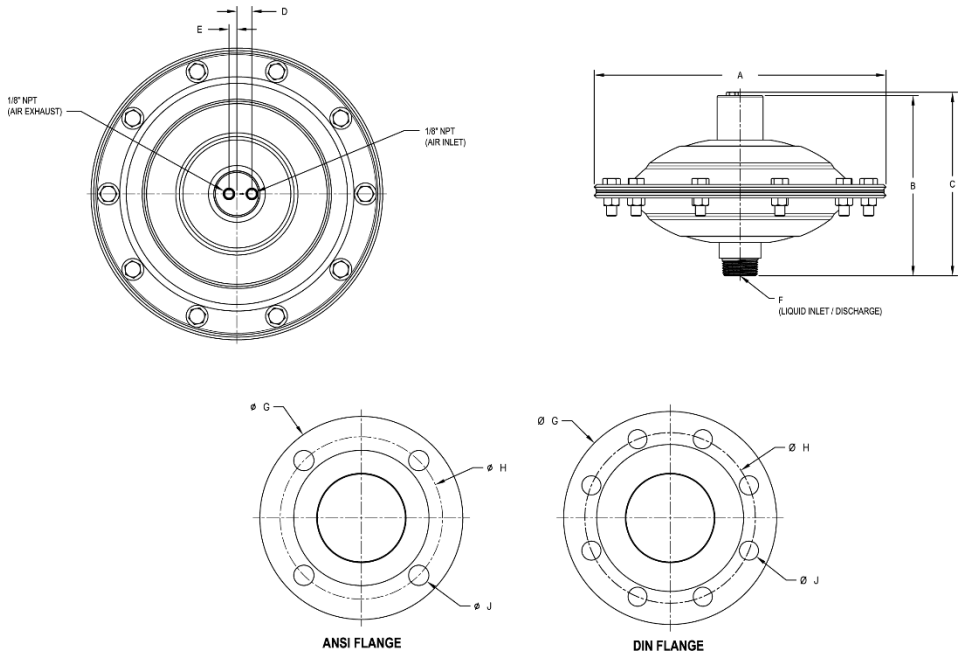

DIMENSIONS

ITEM	METRIC (mm)	STANDARD (inch)
A	474 DIA.	18.7 DIA.
B	333	13.1
C	340	13.4
D	19	.7
E	N/A	N/A
F	76 DIN	3.0 ANSI
ANSI		
G	191 DIA.	7.5 DIA.
H	152 DIA.	6.0 DIA.
J	19 DIA.	.8 DIA.
DIN		
G	200 DIA.	7.9 DIA.
H	160 DIA.	6.3 DIA.
J	18 DIA.	.7 DIA.
Weight	32.00 kg	70.5 lbs

LW0498 REV. C

PERFORMANCE

ISD220

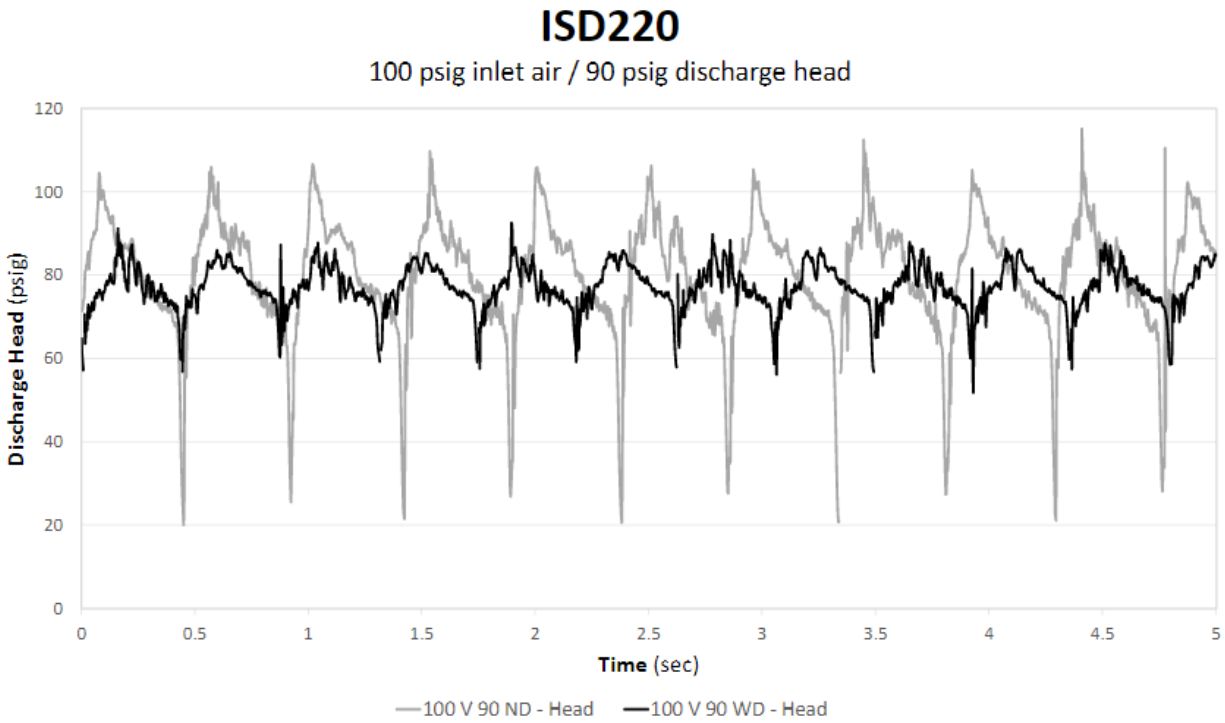

Legend: ND = No Dampener; WD = With Dampener

This chart shows discharge head fluctuations for a diaphragm pump with and without a dampener. By reviewing the variation in pressure, the level of dampening can be estimated for an application. For example, the head pressure generated by a 25 mm (1″) pump operating at 6.89 bar (100 psig) air inlet pressure and 6.2 bar (90 psig) head pressure varies between 1.4 bar (20 psig) and 7.9 bar (115 psig) resulting in a total pressure fluctuation of 6.6 bar (95 psig) for each stroke. When an ISD220/SZSS/TBL dampener is installed in the application, the head pressure varies between 3.6 bar (52 psig) and 6.4 bar (93 psig) resulting in a pressure fluctuation of only 2.8 bar (40 psig).

PERFORMANCE

ISD420

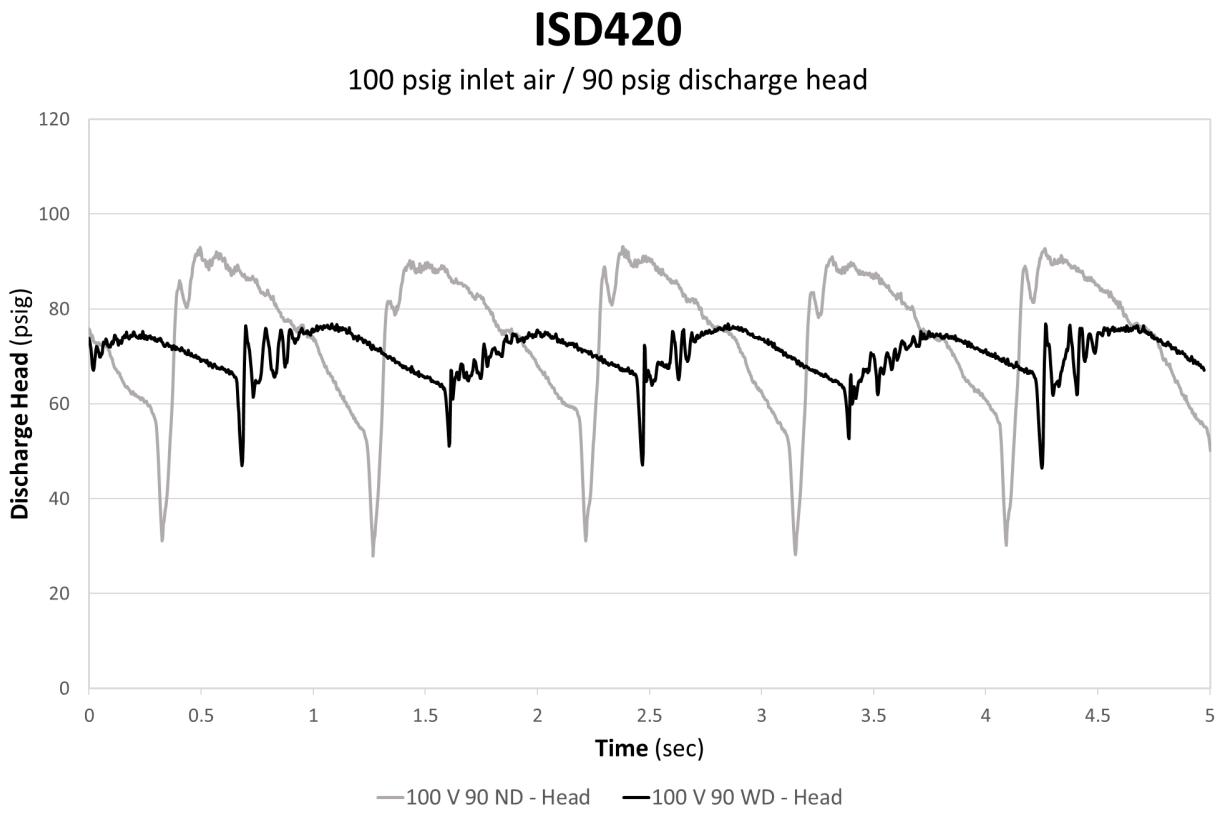

Legend: ND = No Dampener; WD = With Dampener

This chart shows discharge head fluctuations for a diaphragm pump with and without a dampener. By reviewing the variation in pressure, the level of dampening can be estimated for an application. For example, the head pressure generated by a 38 mm (1-1/2″) pump operating at 5.5 bar (80 psig) air inlet pressure and 4.8 bar (70 psig) head pressure varies between 1.2 bar (18 psig) and 5.1 bar (74 psig) resulting in a total pressure fluctuation of 3.9 bar (56 psig) for each stroke. When an ISD420/SZSS/TBL dampener is installed in the application, the head pressure varies between 3.9 bar (56 psig) and 2.4 bar (35 psig) resulting in a pressure fluctuation of only 1.4 bar (21 psig).

PERFORMANCE

ISD820

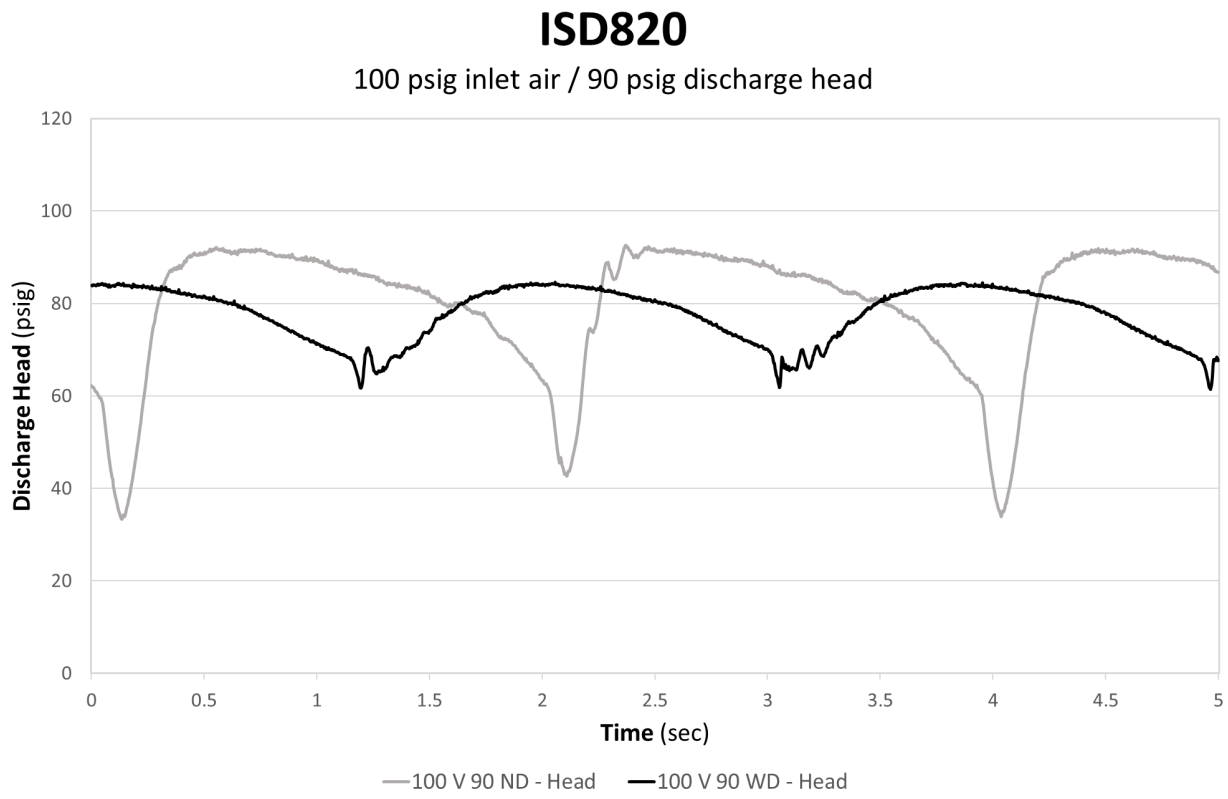

Legend: ND = No Dampener; WD = With Dampener

This chart shows discharge head fluctuations for a diaphragm pump with and without a dampener. By reviewing the variation in pressure, the level of dampening can be estimated for an application. For example, the head pressure generated by a 51 mm (2″) pump operating at 6.89 bar (100 psig) air inlet pressure and 6.2 bar (90 psig) head pressure varies between 2.3 bar (33 psig) and 6.4 bar (93 psig) resulting in a total pressure fluctuation of 4.1 bar (59 psig) for each stroke. When an ISD820/SZSS/TBL dampener is installed in the application, the head pressure varies between 4.2 bar (61 psig) and 5.9 bar (85 psig) resulting in a pressure fluctuation of only 1.6 bar (23 psig).

PERFORMANCE

ISD1520/1530

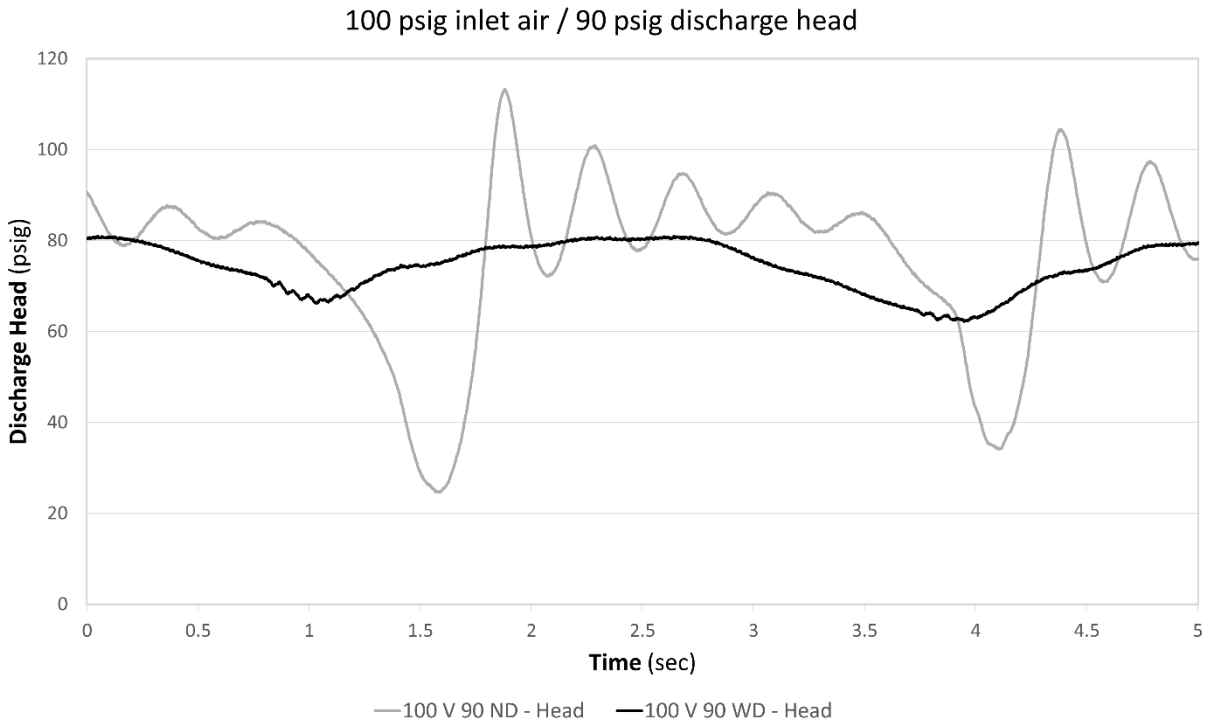

Legend: ND = No Dampener; WD = With Dampener

This chart shows discharge head fluctuations for a diaphragm pump with and without a dampener. By reviewing the variation in pressure, the level of dampening can be estimated for an application. For example, the head pressure generated by a 76 mm (3″) pump operating at 6.89 bar (100 psig) air inlet pressure and 6.2 bar (90 psig) head pressure varies between 1.7 bar (25 psig) and 7.8 bar (113 psig) resulting in a total pressure fluctuation of 6.1 bar (88 psig) for each stroke. When an ISD1520/SZSS/TBL dampener is installed in the application, the head pressure varies between 4.3 bar (62 psig) and 5.6 bar (81 psig) resulting in a pressure fluctuation of only 1.3 bar (19 psig).

SECTION 5

SUGGESTED INSTALLATION, OPERATION, MAINTENANCE AND TROUBLESHOOTING

Wilden Equalizer Metal Surge Dampeners minimize pulsation and protects in-line equipment.

Installation

Before installing an ISD dampener into operation, review cautions and warnings as well as ensure that the materials of construction are suitable for the application. Refer to Wilden's Chemical Resistance Guide for more information.

If installing an ISD dampener in a Wilden pump that is already in operation, be sure to remove the pump from service and thoroughly clean it prior to installation.

For optimal installation orientation, please install ISD as shown in the below diagram. Mounting the ISD in a vertical orientation can shorten the diaphragm life when moving high-viscosity material that may settle. A shut off valve on the inlet of ISD will enable maintenance personnel to safely service the equipment. To maximize effectiveness install the ISD as close as possible to the discharge of the pump. It is important to support the pipe immediately downstream from the ISD. Use a tee connector on the pump air supply line and connect the line to the ISD 1/8" NPT inlet signaled by an arrow. The ISD consumes very little air, therefore, a 1/4" hose is more than adequate to supply enough air volume. When the air supply to the pump is shut down, the air to the ISD will be shut off as well. The ISD can also be installed on the suction side to prevent water hammer associated with a positive inlet condition.

Operation

Before putting the pulsating dampener into operation, the housing bolts should be tightened as elements of construction tend to "settle".

Troubleshooting

When there is a significant drop in fluid discharge pressure, there will be a noticeable release of air through the small bleed hole in the air regulator body. This is how the ISD metal dampener automatically adjusts itself for optimal suppression. This is a good way of verifying proper operation of the unit. If there is a continuous discharge of air out this hole during steady fluid discharge pressure, the ISD is not functioning properly and should be inspected. The ISD air regulator body houses three O-rings which may need to be replaced.

For correct operation, the dampener will require its own air-supply line, taken from the air supply-of the pump. The pump and dampener are required to be connected to the same air pressure. Note that stop or regulating valves may be placed between the pump and dampener. The driving air has to be oil-free, dry and clean. The dampener requires a minimum counter pressure of at least 1 bar (14.5 psig) for optimal function. At startup, run the pump and dampener slowly prior to full operation. Once adjusted and full of fluid, the dampener self-regulates for all changing operating conditions.

It is recommended to tighten housing bolts after a few hours of operation as well. Fixing bolts is necessary as well after long periods of stoppage, extreme temperature variations, or transport/dismantling.

CAUTION: Do not exceed 8.6 bar (125 psig) air supply pressure.

NOTE: In the event of a power failure, the shut-off valve should be closed, if the restarting of the pump is not desirable once power is regained.

Maintenance

When pump disassembly is required, before starting to disassemble the pump, disconnect both the pump and the dampener from service. Thoroughly empty and clean both the pump and dampener before disassembly. Once maintenance is complete, refer to installation guidance prior to putting the pump and dampener back into service.

This illustration is a generic representation of an air-operated double-diaphragm pump with an ISD metal dampener.

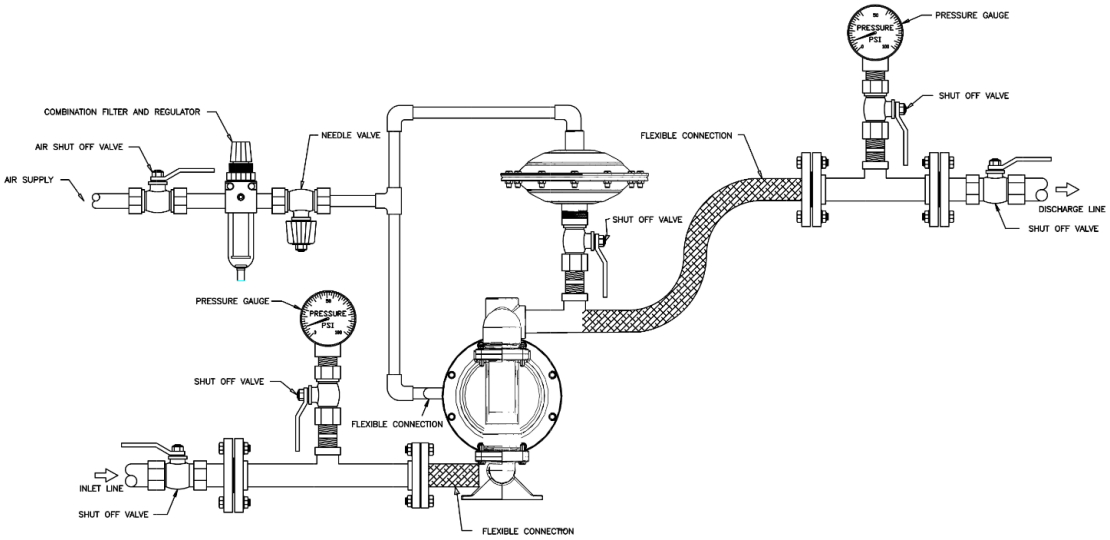

DISASSEMBLY / REASSEMBLY

ISD DAMPENER DISASSEMBLY

For 1" ISD Dampener

- O-ring Pick
- 9/16" Socket Wrench
- 9/16" Wrench
- 1/8" Allen Wrench

For 1-1/2 - 3" ISD Dampener

- O-ring Pick
- 5/8" Socket Wrench
- 5/8" Wrench
- 1/8" Allen Wrench
- Retaining Ring Pliers (3" Only)

CAUTION: Before installing an ISD dampener into operation, review cautions and warnings as well as ensure that the materials of construction are suitable for the application. Refer to Wilden's Chemical Resistance Guide for more information.

NOTE: The model pictured in this section is a metal ISD220 (1") integrated surge dampener. Your specific dampener model may vary from the configuration shown. However, the disassembly procedure will be the same.

NOTE: Replace worn parts with genuine Wilden parts for reliable performance.

Step 1

Loosen bolts with socket wrench.

Step 2

Remove liquid chamber, inspect for damage, and set aside.

Step 3

Pull diaphragm assembly (shaft and diaphragms) away from air chamber. Check O-rings, if they are worn or chemically attacked, they must be removed with an O-ring pick and replaced. Please refer to exploded view and parts list for part numbers.

DISASSEMBLY / REASSEMBLY

ISD DAMPENER REASSEMBLY

For 1" ISD Dampener

- O-ring Pick
- 9/16" Socket Wrench
- 9/16" Wrench
- 1/8" Allen Wrench

For 1-1/2 - 3" ISD Dampener

- O-ring Pick
- 5/8" Socket Wrench
- 5/8" Wrench
- 1/8" Allen Wrench
- Retaining Ring Pliers (3" Only)

CAUTION: Before installing an ISD dampener into operation, review cautions and warnings as well as ensure that the materials of construction are suitable for the application. Refer to Wilden's Chemical Resistance Guide for more information.

NOTE: The model pictured in this section is a metal ISD220 (1") integrated surge dampener. Your specific dampener model may vary from the configuration shown. However, the disassembly procedure will be the same.

NOTE: Replace worn parts with genuine Wilden parts for reliable performance.

Step 1

Install the control valve O-rings into the bottom of the shaft using the O-ring pick. Check that the O-ring is not damaged during installation.

Step 2

Apply 2-3 drops of Vibra-Tite123 (or similar thread locking compound) to the shaft threads.

Step 3

Install the shaft on the backing diaphragm until hand tight.

DISASSEMBLY / REASSEMBLY

Step 4

Apply 2-3 drops of Vibra-Tite123 (or similar thread locking compound) to the small threaded bore.

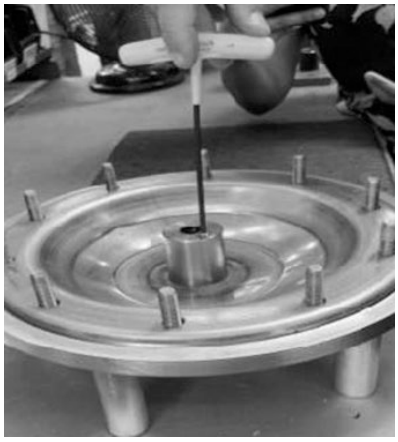

Step 5

Install the set screw and tighten using the Allen Wrench. Be sure the screw does not get over-tightened.

Step 6

Verify the shaft is clean and apply a coat of white EP grease to the shaft.

Step 7

Install the back-up diaphragm and the shaft assembly into the air chamber. Align the bolt holes.

Step 8

Begin installing the bolts and the flat washers.

Step 9

Place the primary diaphragm over the back-up diaphragm.

DISASSEMBLY / REASSEMBLY

Step 10

Install the liquid chamber on top of the primary diaphragm.

Step 11

Place a flat washer at each bolt.

Step 12

Apply anti-seize to the threads of each bolt. Install a nut on each bolt and hand tighten.

Step 13

Using the socket wrench, tighten all nuts and bolts to applicable torque specifications identified on page 18.

Step 14

Note the arrow on the air chamber, pointing to the air inlet. When installing the breather vent, install it in the threaded hole opposite the air inlet.

DISASSEMBLY / REASSEMBLY

MAXIMUM TORQUE SPECIFICATIONS

Model Number	Bolt Torque
ISD220	26 N•m (19 ft-lbs)
ISD420	41 N•m (30 ft-lbs)
ISD820	41 N•m (30 ft-lbs)
ISD1520/ISD1530	41 N•m (30 ft-lbs)

EXPLODED VIEW AND PARTS LIST

EQUALIZER® SURGE DAMPENER
INTEGRATED SD SERIES (ISD) METAL

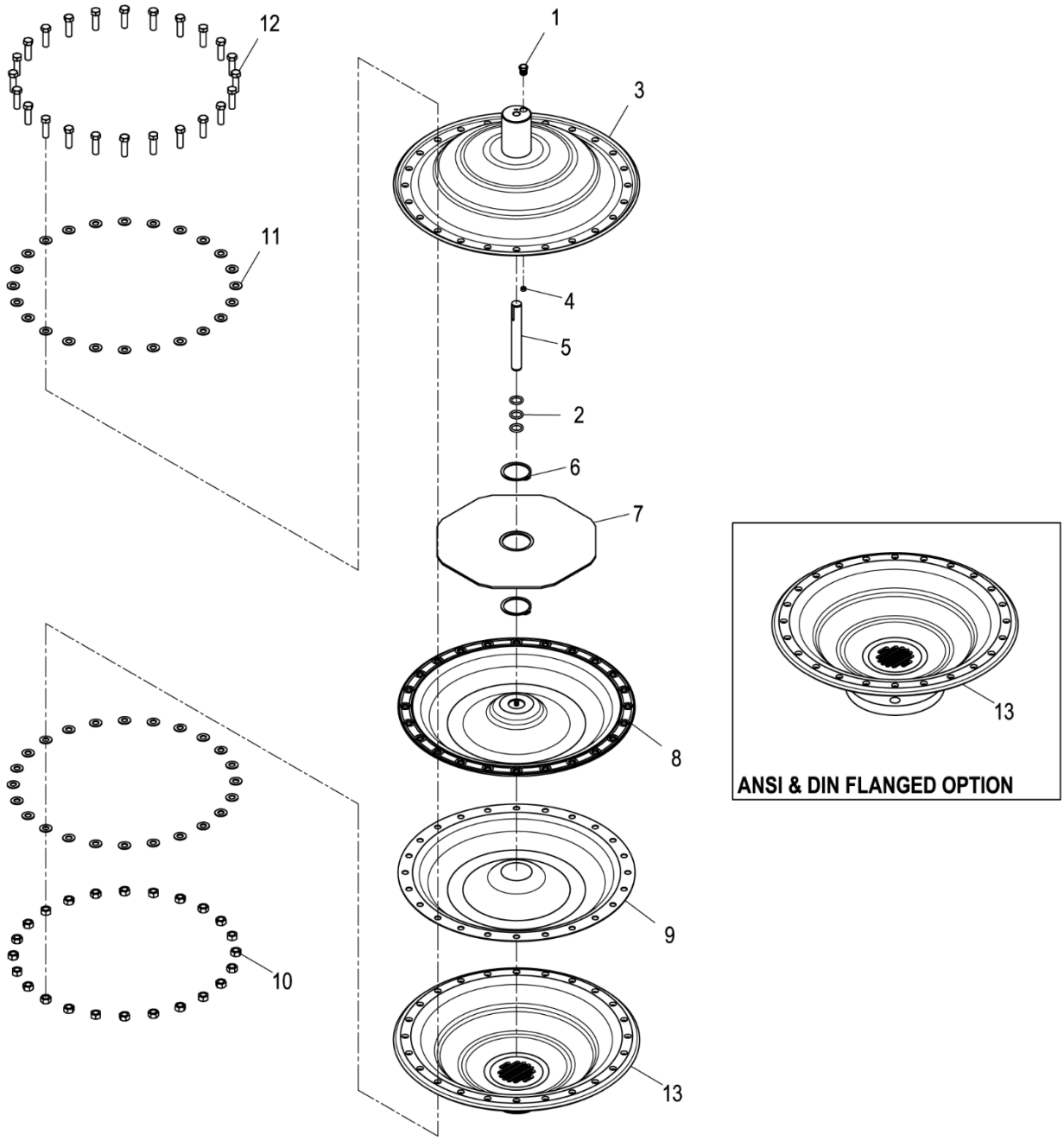

LW0499 REV. D

EXPLODED VIEW AND PARTS LIST

Model Description			ISD220 /SSS/TF/...	ISD420 /SSS/TF/...	ISD820 /SSS/TF/...	ISD1520/1530 /SSS/TF/...
Item	**Description**	**Qty**	**P/N**	**P/N**	**P/N**	**P/N**
Air Distribution Components						
1	Breather Vent, 1/8" NPT	1	73-3241-03			
	Breather Vent, 1/4" NPT	1				79-3241-03
2	**O-Ring, Control Valve (-114, Ø.612" x Ø.103")**	**3**	**00-2870-52**			
	O-Ring, Control Valve (-210, Ø.734" x Ø.139")	**3**				**02-3200-52**
3	Air Chamber Assembly	1	73-3645-99	74-3645-99		79-3645-99
4	Screw, Set (1/4"-20 X 1/4")	1	73-6343-03			
	Screw, Set (3/8"-16 X 1/4")	1				79-6343-03
5	Shaft, Dampener	1	73-3855-03	74-3855-03		79-3855-03
6	Ring,Retainer 3"	2				79-2651-03
7	Plate, Control Valve	1				79-8640-03
8	**Diaphragm, Back-Up**	**1**	**73-1069-52**	**74-1069-52**		**79-1069-52**
9	**Diaphragm. Primary**	**1**	**73-1045-55**	**74-1045-55**		**79-1045-55**
10	Nut, Lock (3/8"-16)	10	99-6471-03			
	Hex Nut (7/16"-14)	12		74-6427-03		
	Hex Nut (7/16"-14)	24				74-6427-03
11	Washer, Flat (Ø.812 X Ø.406 X .065)	20	04-6740-03			
	Washer, Flat (Ø.922 X Ø.469 X .080)	24		74-6734-03		
	Washer, Flat (Ø.922 X Ø.469 X .080)	48				74-6734-03
12	Screw, HHC (3/8"-16 x 1 1/4")	10	73-6190-03			
	Screw, HHC (7/16"-14 x 1 1/4")	12		74-6123-03		
	Screw, HHC (7/16"-14 x 1 1/2")	24				79-6123-03
13	Liquid Chamber Assembly (NPT)	1	73-4984-99	74-4984-99	75-4984-99	79-4984-99
	Liquid Chamber Assembly (BSPT)	1	73-4984-99-14	74-4984-99-14	75-4984-99-14	79-4984-99-14
	Liquid Chamber Assembly (ANSI)	1				79-4986-99
	Liquid Chamber Assembly (DIN)	1				79-4986-99-504

LW0500 Rev. H

All boldface items are primary wear parts.

NOTES

NOTES

NOTES

WILDEN®
PSG
22069 Van Buren Street
Grand Terrace, CA 92313-5651 USA
P: +1 (909) 422 -1730
psgdover.com

Where Innovation Flows

Copyright 2021 PSG®, a Dover® Company
PSG® reserves the right to modify the information and illustrations contained in this document without prior notice. This is a non-contractual document.

WIL-19013-E-03