P.L. : 1401-K01

Effective	April 2022
Replaces	September 2020

PARTS LIST

SCREW COMPRESSOR

B600

Keep this parts lists with Installation, Operation and Maintenance Instructions.

To order the required spare parts, indicate the desired Reference(s).

- Sets of parts or parts available to order.

[PSM] : ONLY FOR MOUVEX SERVICE POINTS

Z.I. la Plaine des Isles - 2 rue des Caillottes F-89000 AUXERRE - France
Tel : +33 (0)3 86 49 86 30 • Fax : +33 (0)3 86 49 87 17
contact.mouvex@psgdover.com • www.mouvex.com

B600

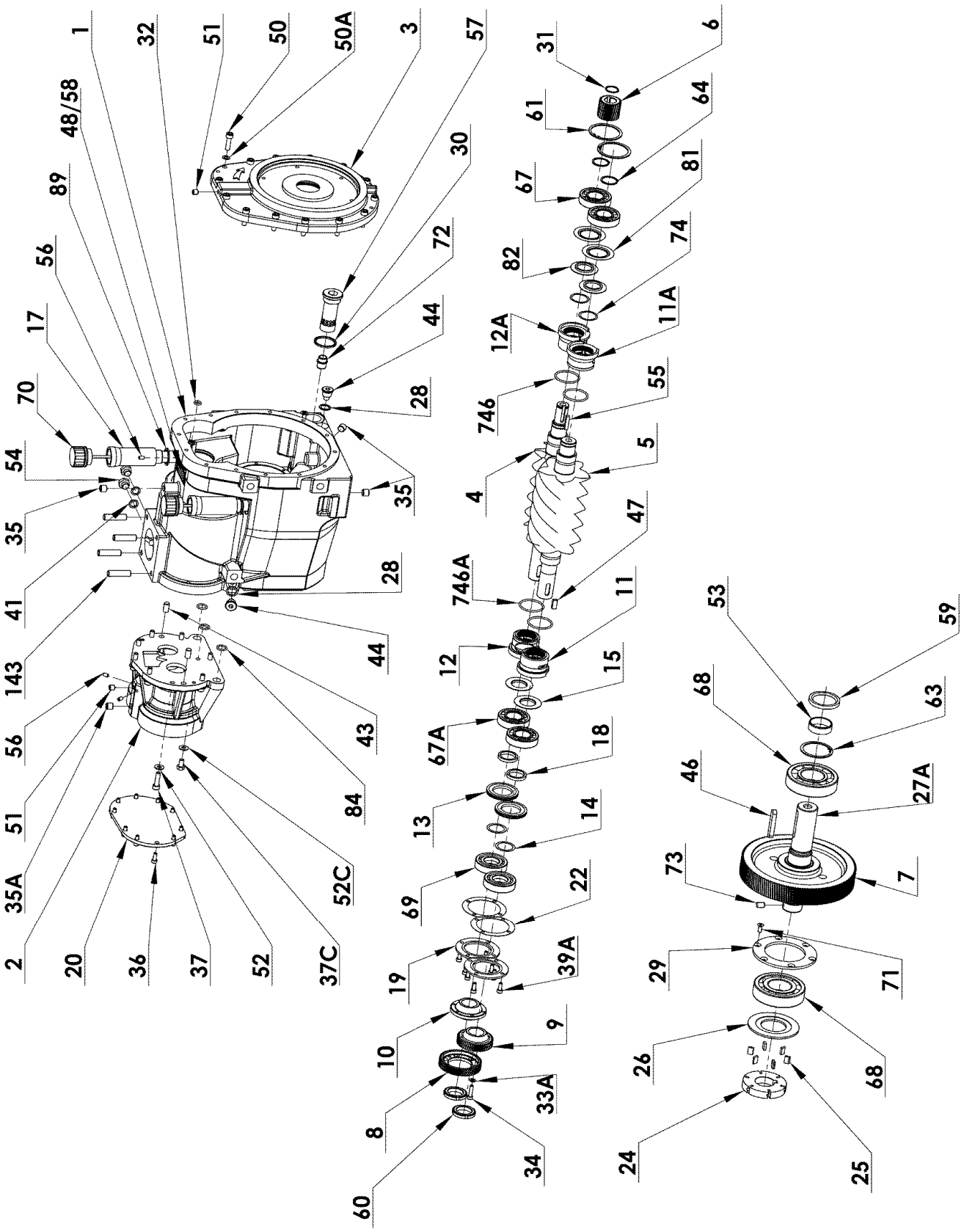
1
32
51
50
50A
3
57
48/58
89
56
17
70
54
35
41
143
56
51
35A
2
20
36
37
52
37C
52C
84
43
44
28
35
28
44
30
72
44
28
31
6
61
64
67
81
82
74
12A
11A
746
55
4
5
47
746A
11
12
15
67A
18
13
14
69
22
19
39A
10
9
8
33A
34
60
53
59
68
63
46
27A
73
7
29
71
26
68
24
25

MULTIPLIER

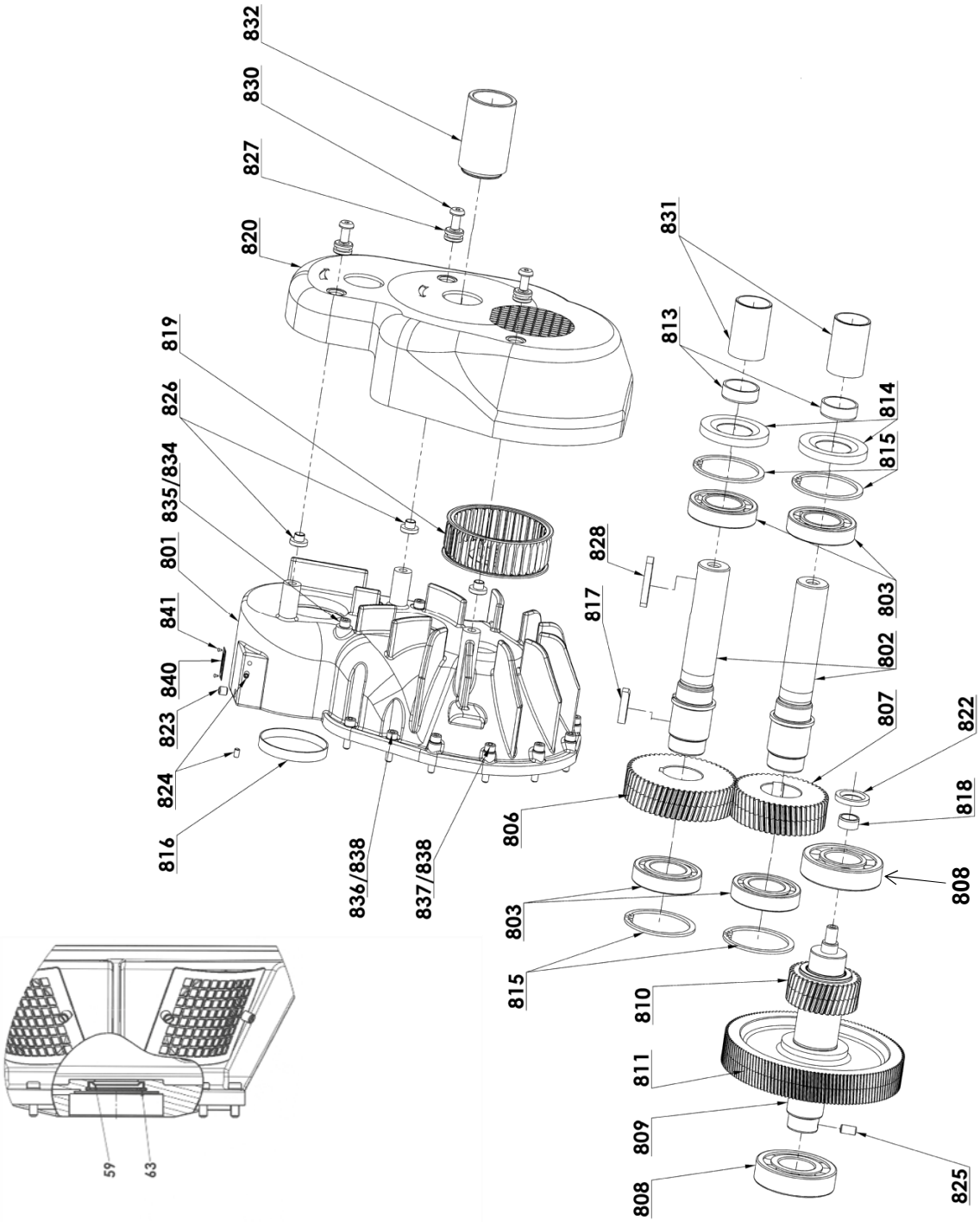

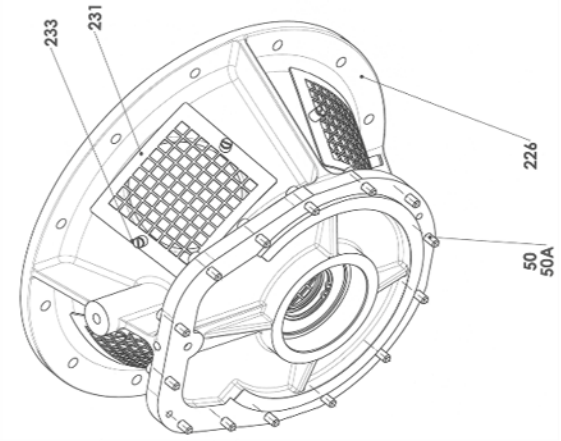

TRUNK

TOOLS (ONLY FOR MOUVEX B600 SERVICE POINTS)

AUX316786

AUX231174

AUX231175

AUX229073

AUX229074

AUX317183

AUX230424

AUX317182

TOOLS (ONLY FOR MOUVEX B600 SERVICE POINTS)

AUX316787

AUX316790

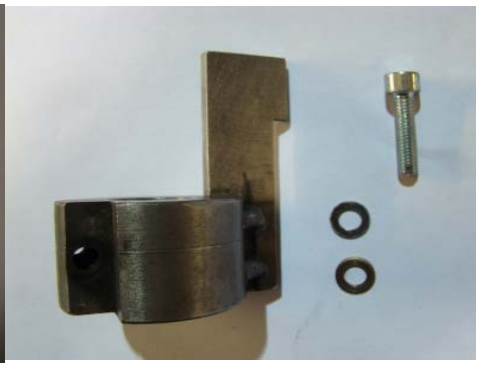

AUX317181

AUX317348

AUX316023

B600

*** 1, 2 ,4… : Quantity in equipment - (1), (2), (4)… : Quantity in kit**

Item	Available	Description	Qty*	Ref.	Maintenance kit	Wear part
1	◆	**BODY**	**1**	**AUX222512**		
24	◆	**ROTOR**	**1**	**AUX219140**		●
44	◆	**MAGNETIC PLUG**	**3**	**AUX215228**		
91	◆	**SET SEAL AND SLEEVE FOR SHAFT**	**1**	**AUX312135**	■	
59	◆	LIP SEAL	1	AUX215438		●
53		SLEEVE	(1)			●
96	◆	**KIT OIL FILTER MISTRAL B600 TYPHON II**	**1**	**AUX312112**	■	
50B		**SEAL WASHER**	(1)			●
57A		**STRAINER**	(1)			●
146	◆	**GEAR BOX ASSEMBLY B600 (NOT ASSEMBLED) [PSM]**	**1**	**AUX313346**		
10		BRACKET	(1)			
13		SPACER	(2)			
14		SET OF SHIMS	(2)			
15		CENTRIFUGATION DISK	(2)			
18		SPACER	(2)			
19		BEARING FLANGE	(2)			
20		COVER	(1)			
22		SET OF SHIMS	(2)			
33A		WASHER	(6)			
34		SCREW	(6)			
35A		PLUG	(1)			
36		SCREW	(10)			
37		SCREW	(8)			
37C		SCREW	(2)			
39A		SCREW	(8)			
51		PLUG	(2)			
52		WASHER	(8)			
52C		WASHER	(2)			
56A		SCREW	(3)			
60		BEARING NUT	(2)			
67A		BALL BEARING	(2)			
69		THRUST BALL BEARING	(2)			
84		O-RING	(3)			
145	◆	SET OF SCREWS B600 [PSM]	1	AUX313347		
212	◆	GEAR BOX AND SEALS 11 12 B600 (NOT ASSEMBLED) [PSM]	1	AUX313349		
2	◆	GEAR BOX B600 [PSM]	1	AUX222525		
11		BRONZE SEAL (RIGHT)	(1)			
12		BRONZE SEAL (LEFT)	(1)			
746A		O-RING	(2)			
167	◆	**MULTIPLIER 20R**	**1**	**AUX312134**		
6		SMALL GEAR	(1)			
7		LARGE GEAR	(1)			
27A		INLET SHAFT	(1)			
31		CIRCLIPS	(1)			
32		SEAL	(1)			
55		KEY	(1)			
167A	◆	**MULTIPLIER 30R**	**1**	**AUX312171**		
6		SMALL GEAR	(1)			
7		LARGE GEAR	(1)			
27A		INLET SHAFT	(1)			
31		CIRCLIPS	(1)			
32		SEAL	(1)			
55		KEY	(1)			

B600

*** 1, 2 ,4… : Quantity in equipment - (1), (2), (4)… : Quantity in kit**

Item	Available	Description	Qty*	Ref.	Maintenance kit	Wear part
230	◆	**COMPRESSOR SAE4 TRUNK KIT (MISTRAL B600 TYPHON II)**	**1**	**AUX314890**		
46		KEY	(1)			
50		SCREW	(14)			
50A		WASHER	(14)			
59	◆	LIP SEAL	1	AUX215438		●
63		CIRCLIPS	(1)			
226		BEARING HOUSING TRUNK	(1)			
832	◆	SAE4 TRUNK GRID KIT	4	AUX315575		
231		GRID	(1)			
233		SCREW	(2)			
373	◆	**OIL DIPSTICK ASSEMBLY B600**	**2**	**AUX313470**	■	
17		OIL DIPSTICK PIPE	(1)			
70	◆	DIPSTICK	1	AUX312655		
75		PLUG	(1)			
89		SEAL WASHER	(2)			
800	◆	**MULTIPLIER 13R 15L**	**1**	**AUX313507**	■	
800	◆	**MULTIPLIER 19R 22L**	**1**	**AUX313964**	■	
32		SEAL	(1)			
801		BODY	(1)			
802		INLET SHAFT	(2)			
803		BALL BEARING	(4)			
806		GEAR 58 TEETH	(1)			
807		GEAR 50 TEETH	(1)			
808		BALL BEARING	(2)			
809		SECONDARY SHAFT	(1)			
810		SMALL GEAR	(1)			
811		LARGE GEAR	(1)			
813	◆	SLEEVE	2	AUX215763		●
814	◆	LIP SEAL	2	AUX220799		●
815		CIRCLIPS	(4)			
816		PLUG	(2)			
817		KEY	(2)			
818		SLEEVE	(1)			●
819	◆	FAN	1	AUX220801		
820	◆	COVER	1	AUX223103		
822		LIP SEAL	(1)			●
823		PLUG	(1)			
824		SCREW	(2)			
825		PIN	(1)			
826		SPACER	(3)			
827	◆	RUBBER RING	3	AUX220803		
828	◆	KEY	1	AUX210995		
830		SCREW	(3)			
831		SPACER	(1)			
832	◆	SHAFT PROTECTOR	1	AUX222835		
834		SEAL WASHER	(3)			
835		SCREW	(3)			
836		SCREW	(4)			
837		SCREW	(6)			
838		WASHER	(10)			
839		SCREW	(1)			
840		SERIAL NUMBER PLATE	(1)			
841		RIVET	(2)			
842		O-RING	(2)			

B600

*** 1, 2 ,4… : Quantity in equipment - (1), (2), (4)… : Quantity in kit**

Item	Available	Description	Qty*	Ref.	Maintenance kit	Wear part
945	◆	**B600 REPAIR KIT LEVEL 1 (NOT ASSEMBLED EXCEPT SCREW KIT) [PSM]**	**1**	**AUX318515**		
7		LARGE GEAR	(1)			
11A		BRONZE SEAL (LEFT)	(1)			
12A		BRONZE SEAL (RIGHT)	(1)			
24	◆	ROTOR	1	AUX219140		●
25A	◆	SET OF 6 VANES FOR OIL PUMP	1	AUX320071		
25		VANE	(6)			●
26		COVER	(1)			
27A		INLET SHAFT	(1)			
29		BEARING CAP	(1)			
46		KEY	(1)			
53		SLEEVE	(1)			●
59	◆	LIP SEAL	1	AUX215438		●
61		CIRCLIPS	(2)			
63		CIRCLIPS	(1)			
64		CIRCLIPS	(2)			
67		BALL BEARING	(2)			
68		BALL BEARING	(2)			
71		SCREW	(6)			
73		PIN	(1)			
74		SPRING	(2)			
81		BEARING SEAL	(2)			
82		CENTRIFUGATION DISK	(2)			
950	◆	SCREW KIT B600 N 20R ASSEMBLY [PSM]	1	AUX314676	■	
6		SMALL GEAR	(1)			
31		CIRCLIPS	(1)			
32		SEAL	(1)			
55		KEY	(1)			
146	◆	GEAR BOX ASSEMBLY B600 (NOT ASSEMBLED) [PSM]	1	AUX313346		
10		BRACKET	(1)			
13		SPACER	(2)			
14		SET OF SHIMS	(2)			
15		CENTRIFUGATION DISK	(2)			
18		SPACER	(2)			
19		BEARING FLANGE	(2)			
20		COVER	(1)			
22		SET OF SHIMS	(2)			
33A		WASHER	(6)			
34		SCREW	(6)			
35A		PLUG	(1)			
36		SCREW	(10)			
37		SCREW	(8)			
37C		SCREW	(2)			
39A		SCREW	(8)			
51		PLUG	(2)			
52		WASHER	(8)			
52C		WASHER	(2)			
56A		SCREW	(3)			
60		BEARING NUT	(2)			
67A		BALL BEARING	(2)			
69		THRUST BALL BEARING	(2)			
84		O-RING	(3)			
145	◆	SET OF SCREWS B600 [PSM]	1	AUX313347		
212	◆	GEAR BOX AND SEALS 11 12 B600 (NOT ASSEMBLED) [PSM]	1	AUX313349		
2	◆	GEAR BOX B600 [PSM]	1	AUX222525		
11		BRONZE SEAL (RIGHT)	(1)			
12		BRONZE SEAL (LEFT)	(1)			
746A		O-RING	(2)			
189		SYNCHRONIZATION GEARS	(1)			

B600

*** 1, 2 ,4… : Quantity in equipment - (1), (2), (4)… : Quantity in kit**

Item	Available	Description	Qty*	Ref.	Maintenance kit	Wear part
946	◆	**B600 REPAIR KIT LEVEL 2 (NOT ASSEMBLED) [PSM]**	**1**	**AUX318517**		
10		BRACKET	(1)			
11		BRONZE SEAL (RIGHT)	(1)			
11A		BRONZE SEAL (LEFT)	(1)			
12		BRONZE SEAL (LEFT)	(1)			
12A		BRONZE SEAL (RIGHT)	(1)			
13		SPACER	(2)			
14		SET OF SHIMS	(2)			
15		CENTRIFUGATION DISK	(2)			
18		SPACER	(2)			
19		BEARING FLANGE	(2)			
22		SET OF SHIMS	(2)			
33A		WASHER	(6)			
34		SCREW	(6)			
39A		SCREW	(8)			
47		KEY	(2)			
55		KEY	(1)			
60		BEARING NUT	(2)			
61		CIRCLIPS	(2)			
64		CIRCLIPS	(2)			
74		SPRING	(2)			
81		BEARING SEAL	(2)			
82		CENTRIFUGATION DISK	(2)			
145	◆	SET OF SCREWS B600 [PSM]	1	AUX313347		
189		SYNCHRONIZATION GEARS	(1)			
947	◆	**B600 REPAIR KIT LEVEL 3 (NOT ASSEMBLED) [PSM]**	**1**	**AUX318519**		
10		BRACKET	(1)			
11		BRONZE SEAL (RIGHT)	(1)			
11A		BRONZE SEAL (LEFT)	(1)			
12		BRONZE SEAL (LEFT)	(1)			
12A		BRONZE SEAL (RIGHT)	(1)			
13		SPACER	(2)			
14		SET OF SHIMS	(2)			
15		CENTRIFUGATION DISK	(2)			
18		SPACER	(2)			
19		BEARING FLANGE	(2)			
22		SET OF SHIMS	(2)			
33A		WASHER	(6)			
34		SCREW	(6)			
39A		SCREW	(8)			
60		BEARING NUT	(2)			
61		CIRCLIPS	(2)			
64		CIRCLIPS	(2)			
74		SPRING	(2)			
81		BEARING SEAL	(2)			
82		CENTRIFUGATION DISK	(2)			
948	◆	**BUSHINGS KIT B600 [PSM]**	**1**	**AUX319159**		
11		BRONZE SEAL (RIGHT)	(1)			
12		BRONZE SEAL (LEFT)	(1)			

B600

*** 1, 2 ,4… : Quantity in equipment - (1), (2), (4)… : Quantity in kit**

Item	Available	Description	Qty*	Ref.	Maintenance kit	Wear part
950	◆	**SCREW KIT B600 N 20R ASSEMBLY [PSM]**	**1**	**AUX314676**	■	
6		SMALL GEAR	(1)			
31		CIRCLIPS	(1)			
32		SEAL	(1)			
55		KEY	(1)			
146	◆	GEAR BOX ASSEMBLY B600 (NOT ASSEMBLED) [PSM]	1	AUX313346		
10		BRACKET	(1)			
13		SPACER	(2)			
14		SET OF SHIMS	(2)			
15		CENTRIFUGATION DISK	(2)			
18		SPACER	(2)			
19		BEARING FLANGE	(2)			
20		COVER	(1)			
22		SET OF SHIMS	(1)			
33A		WASHER	(6)			
34		SCREW	(6)			
35A		PLUG	(1)			
36		SCREW	(10)			
37		SCREW	(8)			
37C		SCREW	(2)			
39A		SCREW	(8)			
51		PLUG	(2)			
52		WASHER	(8)			
52C		WASHER	(2)			
56A		SCREW	(3)			
60		BEARING NUT	(2)			
67A		BALL BEARING	(2)			
69		THRUST BALL BEARING	(2)			
84		O-RING	(3)			
145	◆	SET OF SCREWS B600 [PSM]	1	AUX313347		
212	◆	GEAR BOX AND SEALS 11 12 B600 (NOT ASSEMBLED) [PSM]	1	AUX313349		
2	◆	GEAR BOX B600 [PSM]	1	AUX222525		
11		BRONZE SEAL (RIGHT)	(1)			
12		BRONZE SEAL (LEFT)	(1)			
746A		O-RING	(2)			
189		SYNCHRONIZATION GEARS	(1)			

B600

*** 1, 2 ,4… : Quantity in equipment - (1), (2), (4)… : Quantity in kit**

Item	Available	Description	Qty*	Ref.	Maintenance kit	Wear part
952	◆	**SCREW KIT B600 N 30R ASSEMBLY [PSM]**	**1**	**AUX314682**	■	
6		SMALL GEAR	(1)			
31		CIRCLIPS	(1)			
32		SEAL	(1)			
55		KEY	(1)			
146	◆	GEAR BOX ASSEMBLY B600 (NOT ASSEMBLED) [PSM]	1	AUX313346		
10		BRACKET	(1)			
13		SPACER	(2)			
14		SET OF SHIMS	(2)			
15		CENTRIFUGATION DISK	(2)			
18		SPACER	(2)			
19		BEARING FLANGE	(2)			
20		COVER	(1)			
22		SET OF SHIMS	(1)			
33A		WASHER	(6)			
34		SCREW	(6)			
35A		PLUG	(1)			
36		SCREW	(10)			
37		SCREW	(8)			
37C		SCREW	(2)			
39A		SCREW	(8)			
51		PLUG	(2)			
52		WASHER	(8)			
52C		WASHER	(2)			
56A		SCREW	(3)			
60		BEARING NUT	(2)			
67A		BALL BEARING	(2)			
69		THRUST BALL BEARING	(2)			
84		O-RING	(3)			
145	◆	SET OF SCREWS B600 [PSM]	1	AUX313347		
212	◆	GEAR BOX AND SEALS 11 12 B600 (NOT ASSEMBLED) [PSM]	1	AUX313349		
2	◆	GEAR BOX B600 [PSM]	1	AUX222525		
11		BRONZE SEAL (RIGHT)	(1)			
12		BRONZE SEAL (LEFT)	(1)			
746A		O-RING	(2)			
189		SYNCHRONIZATION GEARS	(1)			
954	◆	**A SERVICE KIT B600 (NOT ASSEMBLED) [PSM]**	**1**	**AUX313928**		
6		SMALL GEAR	(1)			
11A		BRONZE SEAL (LEFT)	(2)			
12A		BRONZE SEAL (RIGHT)	(2)			
14		SET OF SHIMS	(2)			
22		SET OF SHIMS	(1)			
31		CIRCLIPS	(1)			
55		KEY	(1)			
67		BALL BEARING	(2)			
67A		BALL BEARING	(2)			
68		BALL BEARING	(2)			
69		THRUST BALL BEARING	(2)			
145	◆	SET OF SCREWS B600 [PSM]	1	AUX313347		

B600

*** 1, 2 ,4… : Quantity in equipment - (1), (2), (4)… : Quantity in kit**

Item	Available	Description	Qty*	Ref.	Maintenance kit	Wear part
955	◆	**SERVICE KIT B B600 (NOT ASSEMBLED) [PSM]**	**1**	**AUX313926**		
6		SMALL GEAR	(1)			
14		SET OF SHIMS	(2)			
22		SET OF SHIMS	(1)			
31		CIRCLIPS	(1)			
55		KEY	(1)			
67		BALL BEARING	(2)			
67A		BALL BEARING	(2)			
68		BALL BEARING	(2)			
69		THRUST BALL BEARING	(2)			
956	◆	**SERVICE KIT C B600 (NOT ASSEMBLED) [PSM]**	**1**	**AUX314390**		
6		SMALL GEAR	(1)			
11A		BRONZE SEAL (LEFT)	(1)			
12A		BRONZE SEAL (RIGHT)	(1)			
14		SET OF SHIMS	(2)			
18		SPACER	(2)			
22		SET OF SHIMS	(2)			
25A	◆	SET OF 6 VANES FOR OIL PUMP	1	AUX320071		
25		VANE	(6)			●
30		SEAL WASHER	(1)			
31		CIRCLIPS	(1)			
32		SEAL	(1)			
33A		WASHER	(6)			
34		SCREW	(6)			
37		SCREW	(8)			
41		SEAL	(3)			
44	◆	MAGNETIC PLUG	3	AUX215228		
46		KEY	(1)			
47		KEY	(2)			
52		WASHER	(8)			
53		SLEEVE	(1)			●
55		KEY	(1)			
59	◆	LIP SEAL	1	AUX215438		●
64		CIRCLIPS	(2)			
67		BALL BEARING	(2)			
67A		BALL BEARING	(2)			
68		BALL BEARING	(2)			
69		THRUST BALL BEARING	(2)			
74		SPRING	(2)			
81		BEARING SEAL	(2)			
84		O-RING	(3)			
89		SEAL WASHER	(2)			
145	◆	SET OF SCREWS B600 [PSM]	1	AUX313347		
189		SYNCHRONIZATION GEARS	(1)			
212	◆	GEAR BOX AND SEALS 11 12 B600 (NOT ASSEMBLED) [PSM]	1	AUX313349		
2	◆	GEAR BOX B600 [PSM]	1	AUX222525		
11		BRONZE SEAL (RIGHT)	(1)			
12		BRONZE SEAL (LEFT)	(1)			
746A		O-RING	(2)			
746		O-RING	(2)			
1165	◆	**SYNCHRONIZATION GEARS MH6 B600 [PSM]**	**1**	**AUX316513**		
33A		WASHER	(6)			
34		SCREW	(6)			
189		SYNCHRONIZATION GEARS	(1)			

B600

*** 1, 2 ,4… : Quantity in equipment - (1), (2), (4)… : Quantity in kit**

Item	Available	Description	Qty*	Ref.	Maintenance kit	Wear part
1534	◆	**CAN OF 10 LITRES (BSC3 OIL)**	**1**	**AUX316304**		●
1535	◆	**CAN OF 30 LITRES (BSC3 OIL)**	**1**	**AUX316305**	■	●
1536	◆	**CAN OF 208 LITRES (BSC3 OIL)**	**1**	**AUX316492**		●
1537	◆	**CAN OF 1 LITRE (BSC3 OIL)**	**1**	**AUX316301**		●
1538	◆	**CAN OF 2 LITRES (BSC3 OIL)**	**1**	**AUX316302**		●
1539	◆	**CAN OF 5 LITRES (BSC3 OIL)**	**1**	**AUX316303**		●
1562	◆	**SERVICE TOOLS B600 [PSM]**	**1**	**AUX317376**		
949	◆	TOOL B600 ASSEMBLING DUMMY [PSM]	1	AUX317348		
957	◆	EXTRACTING TOOL FOR GEAR ITEM 6 (B600) [PSM]	1	AUX316023		
1551	◆	TOOL BRONZE SEAL FIXING [PSM]	1	AUX316786		
1554	◆	TOOL EXT BEARING GEAR BOX ASSEMBLING [PSM]	1	AUX229074		
1558	◆	TOOL INT BEARING GEAR BOX ASSEMBLING [PSM]	1	AUX229073		
1559A	◆	TOOL STACKING COMPRESSION ADJUSTING B600 [PSM]	1	AUX317183		
1559B	◆	TOOL FACE CLEARANCE GEAR BOX ADJUSTING [PSM]	1	AUX317182		
1560	◆	TOOL SCREW LOCK [PSM]	1	AUX316787		
1561	◆	TOOL SYNCHRONIZATION GEARS LOCK [PSM]	1	AUX316790		
1592	◆	TOOL SYNCHRO GEARS LOCK SETTING [PSM]	1	AUX317181		
1601	◆	TOOL TIGHTENING [PSM]	1	AUX230424		
1603	◆	TOOL FILTER INSERT ASSEMBLING [PSM]	1	AUX231174		
1604	◆	TOOL BEARING 68 ASSEMBLING [PSM]	1	AUX231175		
1579	◆	**CONVERSION KIT FOR 20R TO 30R (NOT ASSEMBLED)**	**1**	**AUX315127**	■	
46		KEY	(1)			
53		SLEEVE	(1)			●
59	◆	LIP SEAL	1	AUX215438		●
63		CIRCLIPS	(1)			
68		BALL BEARING	(2)			
73		PIN	(1)			
167	◆	MULTIPLIER 30R	1	AUX312171		
6		SMALL GEAR	(1)			
7		LARGE GEAR	(1)			
27A		INLET SHAFT	(1)			
31		CIRCLIPS	(1)			
32		SEAL	(1)			
55		KEY	(1)			
1580	◆	**CONVERSION KIT FOR 30R TO 20R (NOT ASSEMBLED)**	**1**	**AUX315128**	■	
46		KEY	(1)			
53		SLEEVE	(1)			●
59	◆	LIP SEAL	1	AUX215438		●
63		CIRCLIPS	(1)			
68		BALL BEARING	(2)			
73		PIN	(1)			
167	◆	MULTIPLIER 20R	1	AUX312134		
6		SMALL GEAR	(1)			
7		LARGE GEAR	(1)			
27A		INLET SHAFT	(1)			
31		CIRCLIPS	(1)			
32		SEAL	(1)			
55		KEY	(1)			

B600

*** 1, 2 ,4… : Quantity in equipment - (1), (2), (4)… : Quantity in kit**

Item	Available	Description	Qty*	Ref.	Maintenance kit	Wear part
1581	◆	**CONVERSION KIT FOR 20R TO 19R_22L (NOT ASSEMBLED)**	**1**	**AUX315063**	■	
6		SMALL GEAR	(1)			
31		CIRCLIPS	(1)			
55		KEY	(1)			
800	◆	MULTIPLIER 19R 22L	1	AUX313964	■	
32		SEAL	(1)			
801		BODY	(1)			
802		INLET SHAFT	(2)			
803		BALL BEARING	(4)			
806		GEAR 58 TEETH	(1)			
807		GEAR 50 TEETH	(1)			
808		BALL BEARING	(2)			
809		SECONDARY SHAFT	(1)			
810		SMALL GEAR	(1)			
811		LARGE GEAR	(1)			
813	◆	SLEEVE	2	AUX215763		●
814	◆	LIP SEAL	2	AUX220799		●
815		CIRCLIPS	(4)			
816		PLUG	(2)			
817		KEY	(2)			
818		SLEEVE	(1)			●
819	◆	FAN	1	AUX220801		
820	◆	COVER	1	AUX223103		
822		LIP SEAL	(1)			●
823		PLUG	(1)			
824		SCREW	(2)			
825		PIN	(1)			
826		SPACER	(3)			
827	◆	RUBBER RING	3	AUX220803		
828	◆	KEY	1	AUX210995		
830		SCREW	(3)			
831		SPACER	(1)			
832	◆	SHAFT PROTECTOR	1	AUX222835		
834		SEAL WASHER	(3)			
835		SCREW	(3)			
836		SCREW	(4)			
837		SCREW	(6)			
838		WASHER	(10)			
839		SCREW	(1)			
840		SERIAL NUMBER PLATE	(1)			
841		RIVET	(2)			
842		O-RING	(2)			

B600

*** 1, 2 ,4… : Quantity in equipment - (1), (2), (4)… : Quantity in kit**

Item	Available	Description	Qty*	Ref.	Maintenance kit	Wear part
1582	◆	**CONVERSION KIT FOR 30R TO 13R_15L (NOT ASSEMBLED)**	**1**	**AUX315064**	■	
6		SMALL GEAR	(1)			
31		CIRCLIPS	(1)			
55		KEY	(1)			
800	◆	MULTIPLIER 13R 15L	1	AUX313507	■	
32		SEAL	(1)			
801		BODY	(1)			
802		INLET SHAFT	(2)			
803		BALL BEARING	(4)			
806		GEAR 58 TEETH	(1)			
807		GEAR 50 TEETH	(1)			
808		BALL BEARING	(2)			
809		SECONDARY SHAFT	(1)			
810		SMALL GEAR	(1)			
811		LARGE GEAR	(1)			
813	◆	SLEEVE	2	AUX215763		●
814	◆	LIP SEAL	2	AUX220799		●
815		CIRCLIPS	(4)			
816		PLUG	(2)			
817		KEY	(2)			
818		SLEEVE	(1)			●
819	◆	FAN	1	AUX220801		
820	◆	COVER	1	AUX223103		
822		LIP SEAL	(1)			●
823		PLUG	(1)			
824		SCREW	(2)			
825		PIN	(1)			
826		SPACER	(3)			
827	◆	RUBBER RING	3	AUX220803		
828	◆	KEY	1	AUX210995		
830		SCREW	(3)			
831		SPACER	(1)			
832	◆	SHAFT PROTECTOR	1	AUX222835		
834		SEAL WASHER	(3)			
835		SCREW	(3)			
836		SCREW	(4)			
837		SCREW	(6)			
838		WASHER	(10)			
839		SCREW	(1)			
840		SERIAL NUMBER PLATE	(1)			
841		RIVET	(2)			
842		O-RING	(2)			

B600

*** 1, 2 ,4… : Quantity in equipment - (1), (2), (4)… : Quantity in kit**

Item	Available	Description	Qty*	Ref.	Maintenance kit	Wear part
1583	◆	**CONVERSION KIT FOR 13R_15L TO 19R_22L (NOT ASSEMBLED)**	**1**	**AUX315241**	■	
6		SMALL GEAR	(1)			
31		CIRCLIPS	(1)			
32		SEAL	(1)			
55		KEY	(1)			
808		BALL BEARING	(2)			
809		SECONDARY SHAFT	(1)			
810		SMALL GEAR	(1)			
811		LARGE GEAR	(1)			
818		SLEEVE	(1)			●
822		LIP SEAL	(1)			●
825		PIN	(1)			
1584	◆	**CONVERSION KIT FOR 19R_22L TO 13R_15L (NOT ASSEMBLED)**	**1**	**AUX315242**	■	
6		SMALL GEAR	(1)			
31		CIRCLIPS	(1)			
32		SEAL	(1)			
55		KEY	(1)			
808		BALL BEARING	(2)			
809		SECONDARY SHAFT	(1)			
810		SMALL GEAR	(1)			
811		LARGE GEAR	(1)			
818		SLEEVE	(1)			●
822		LIP SEAL	(1)			●
825		PIN	(1)			
1585	◆	**CONVERSION KIT FOR 13R/15L TO 20R (NOT ASSEMBLED)**	**1**	**AUX316899**	■	
3		COVER	(1)			
7		LARGE GEAR	(1)			
27A		INLET SHAFT	(1)			
32		SEAL	(1)			
46		KEY	(1)			
50		SCREW	(14)			
50A		WASHER	(14)			
51		PLUG	(1)			
53		SLEEVE	(1)			●
59	◆	LIP SEAL	1	AUX215438		●
63		CIRCLIPS	(1)			
68		BALL BEARING	(2)			
73		PIN	(1)			
1586	◆	**CONVERSION KIT FOR 13R/15L TO 30R (NOT ASSEMBLED)**	**1**	**AUX316900**	■	
3		COVER	(1)			
46		KEY	(1)			
50		SCREW	(14)			
50A		WASHER	(14)			
51		PLUG	(1)			
53		SLEEVE	(1)			●
59	◆	LIP SEAL	1	AUX215438		●
63		CIRCLIPS	(1)			
68		BALL BEARING	(2)			
73		PIN	(1)			
167	◆	MULTIPLIER 30R	1	AUX312171		
6		SMALL GEAR	(1)			
7		LARGE GEAR	(1)			
27A		INLET SHAFT	(1)			
31		CIRCLIPS	(1)			
32		SEAL	(1)			
55		KEY	(1)			

B600

*** 1, 2 ,4… : Quantity in equipment - (1), (2), (4)… : Quantity in kit**

Item	Available	Description	Qty*	Ref.	Maintenance kit	Wear part
1655	◆	**CONVERSION KIT FOR 19R_22L TO 20R (NOT ASSEMBLED)**	**1**	**AUX319858**	■	
3		COVER	(1)			
6		SMALL GEAR	(1)			
7		LARGE GEAR	(1)			
27A		INLET SHAFT	(1)			
31		CIRCLIPS	(1)			
32		SEAL	(1)			
46		KEY	(1)			
50		SCREW	(14)			
50A		WASHER	(14)			
51		PLUG	(1)			
53		SLEEVE	(1)			●
55		KEY	(1)			
59	◆	LIP SEAL	1	AUX215438		●
63		CIRCLIPS	(1)			
68		BALL BEARING	(2)			
73		PIN	(1)			
1656	◆	**CONVERSION KIT FOR 19R_22L TO 30R (NOT ASSEMBLED)**	**1**	**AUX319859**	■	
3		COVER	(1)			
7		LARGE GEAR	(1)			
27A		INLET SHAFT	(1)			
32		SEAL	(1)			
46		KEY	(1)			
50		SCREW	(14)			
50A		WASHER	(14)			
51		PLUG	(1)			
53		SLEEVE	(1)			●
59	◆	LIP SEAL	1	AUX215438		●
63		CIRCLIPS	(1)			
68		BALL BEARING	(2)			
73		PIN	(1)			