P.L. : 1401-Z01

Effective	May 2026
Replaces	August 2024

PARTS LIST
SCREW COMPRESSOR
MH6

Keep this parts lists with Installation, Operation and Maintenance Instructions.

To order the required spare parts, indicate the desired Reference(s).

- Sets of parts or parts available to order.

[PSM] : ONLY FOR MOUVEX SERVICE POINTS

ACTION	MOUVEX MH6 SERVICE POINTS	OTHERS
Repairing	**Allowed**	**Forbidden and voids the warranty.** **Compressor must be returned to MOUVEX Service Points or MOUVEX.**

Z.I. la Plaine des Isles - 2 rue des Caillottes F-89000 AUXERRE - France
Tél : +33 (0)3 86 49 86 30
contact.mouvex@psgdover.com • www.mouvex.com

MH6 - DS (Dynamic Seal) & LS (Lip Seal)

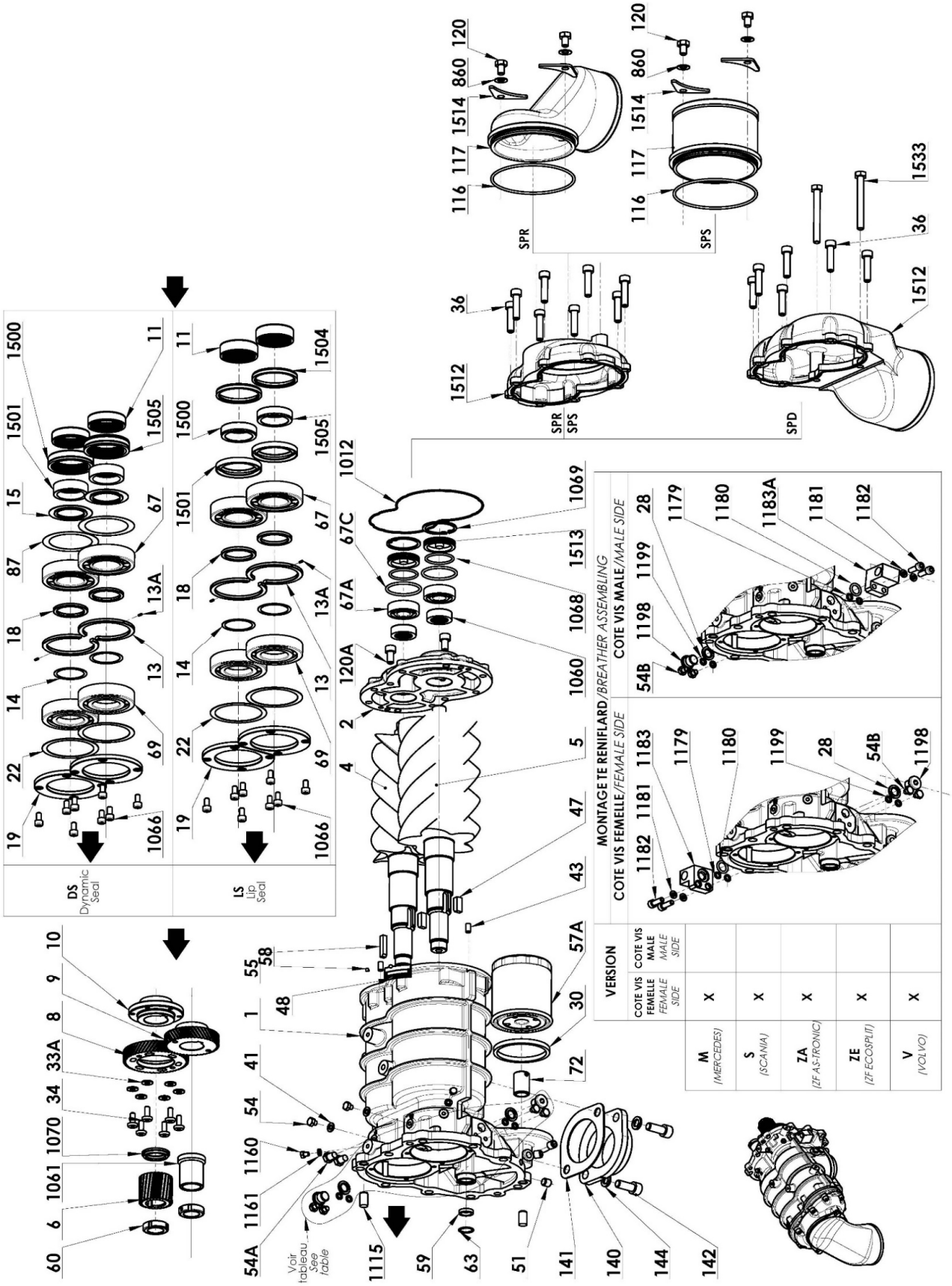

BREATHERS MH6 - DS

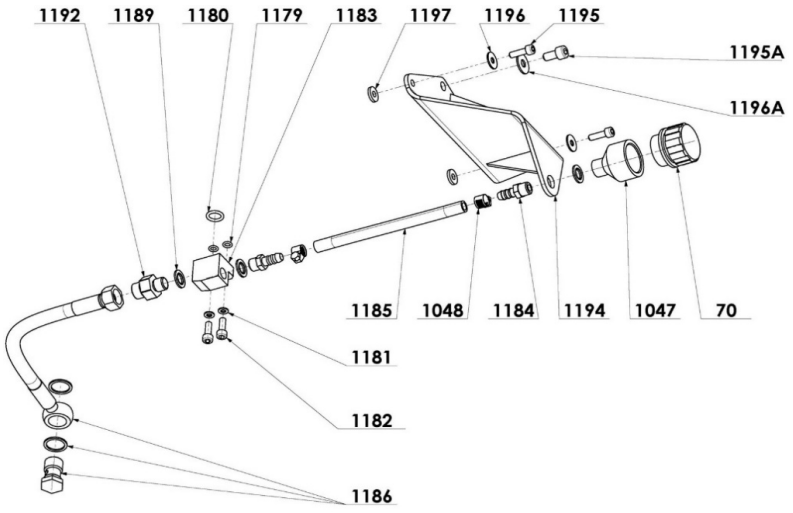

MB

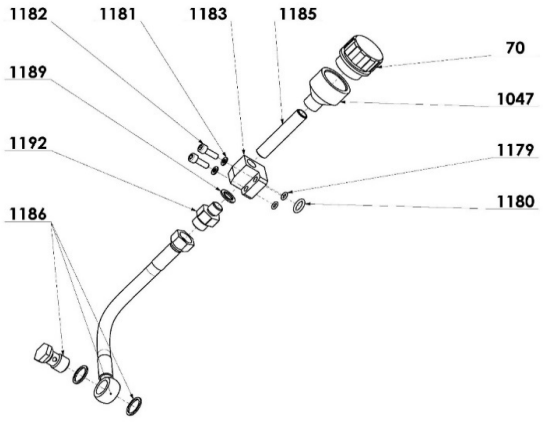

ZF AS-TRONIC

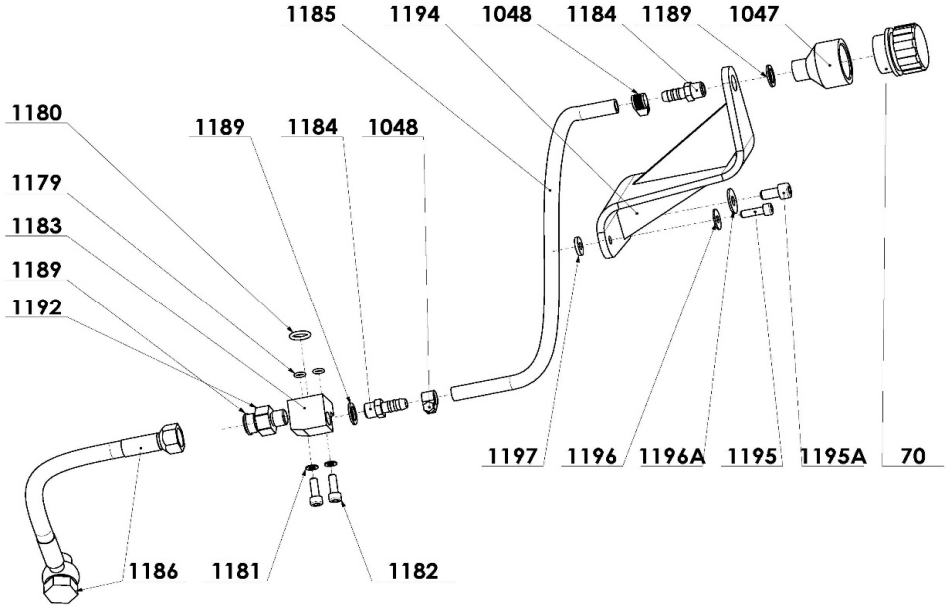

SCANIA

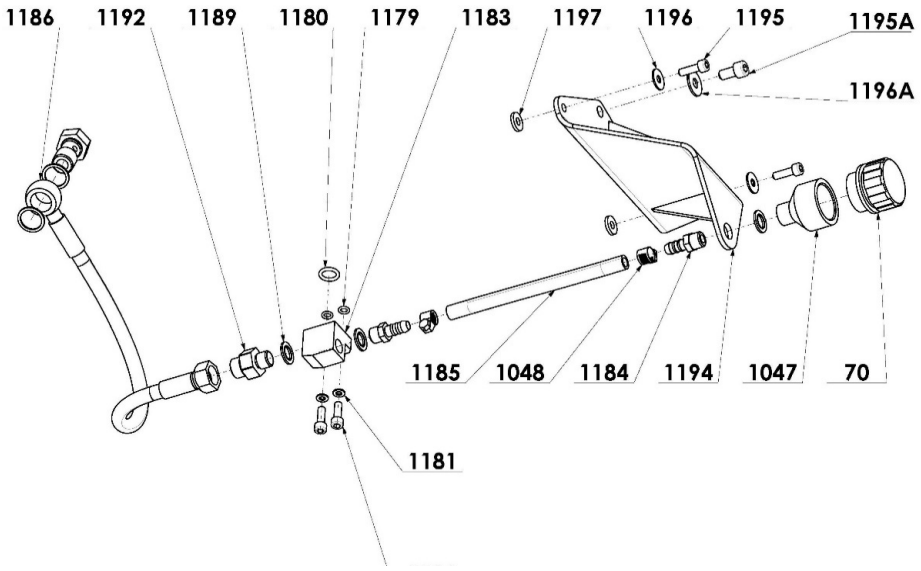

VOLVO

ACCESSORIES

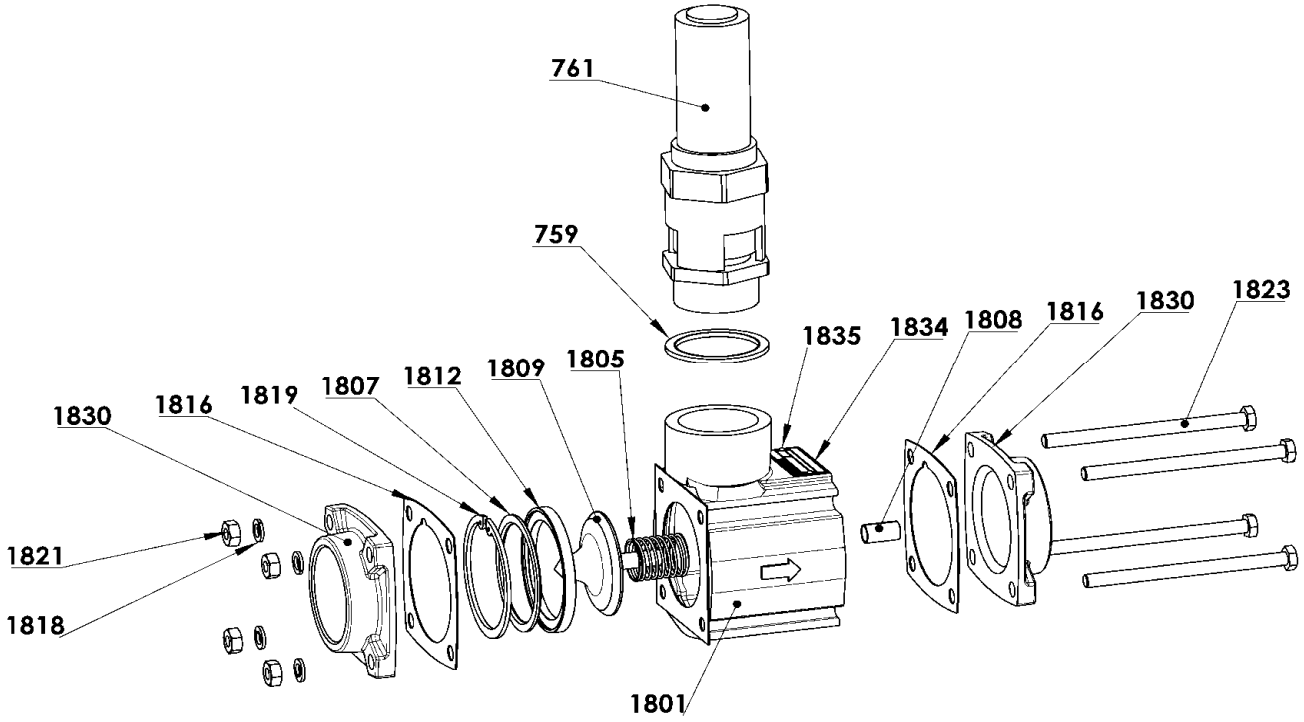

Check and relief valve

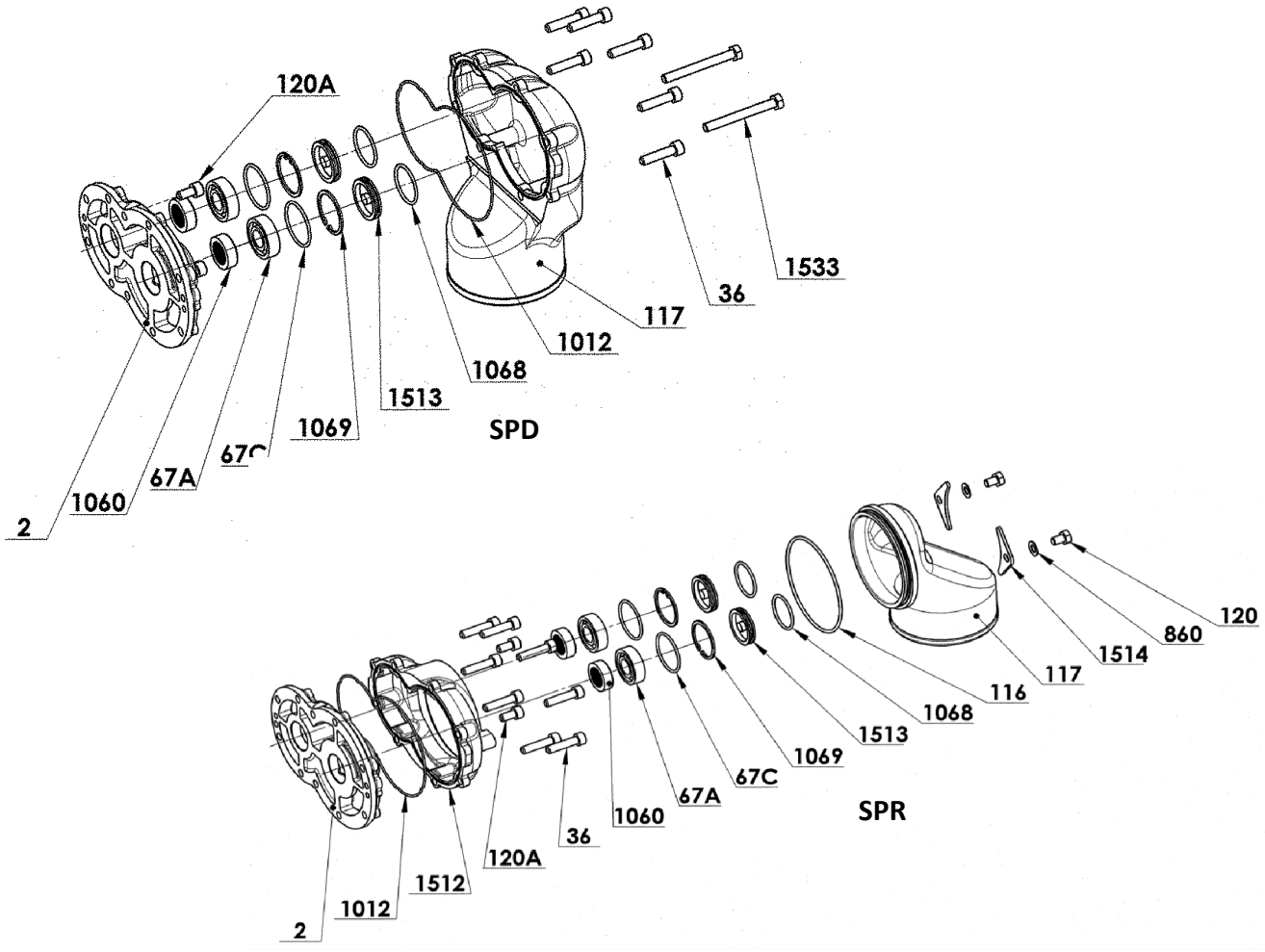

Kit suction pipe

ACCESSORIES

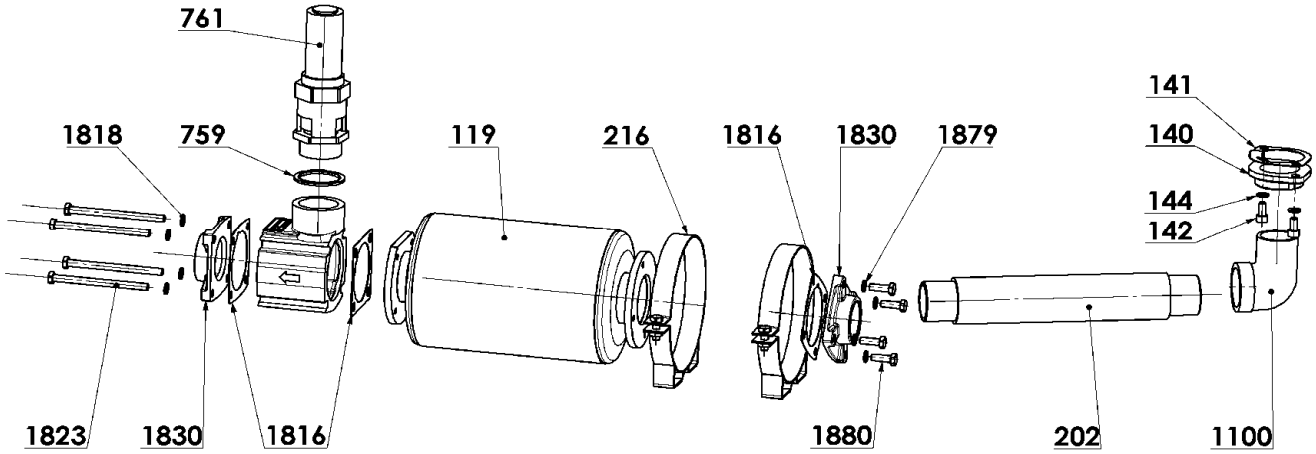

Silencer

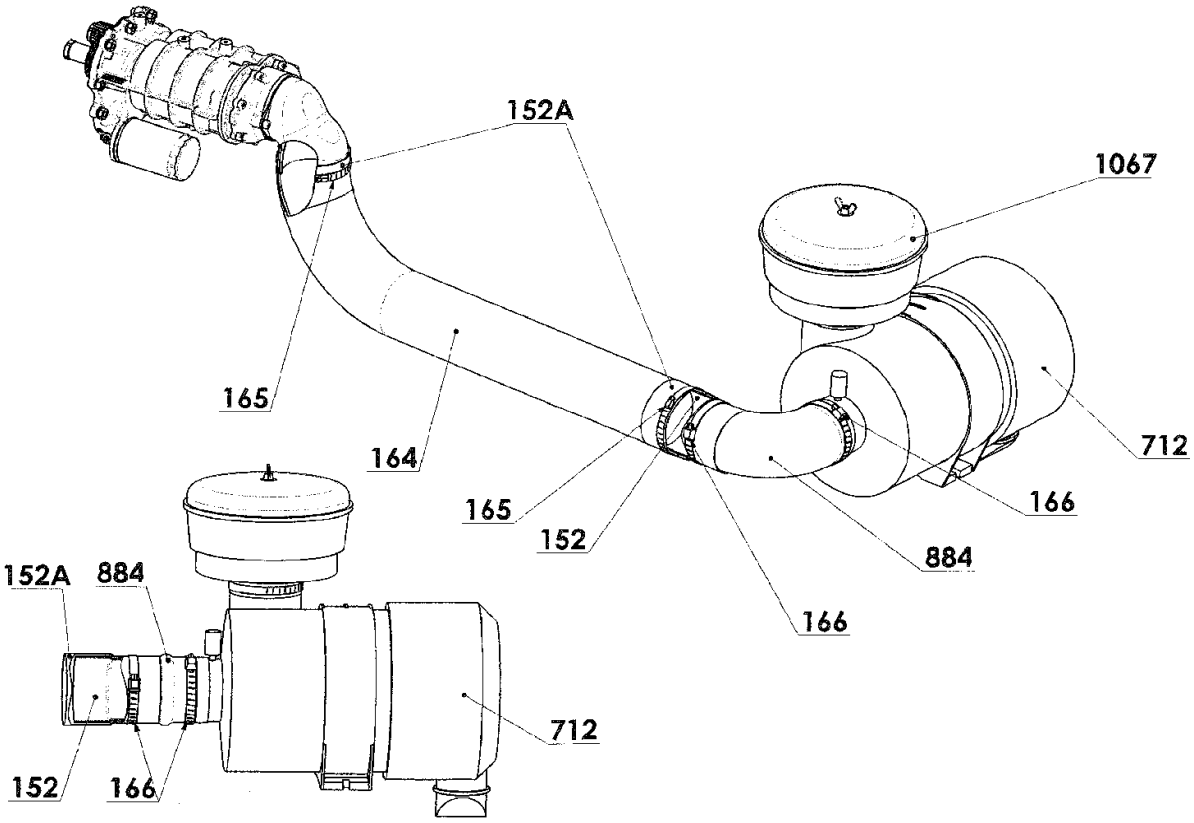

Air filter

ACCESSORIES

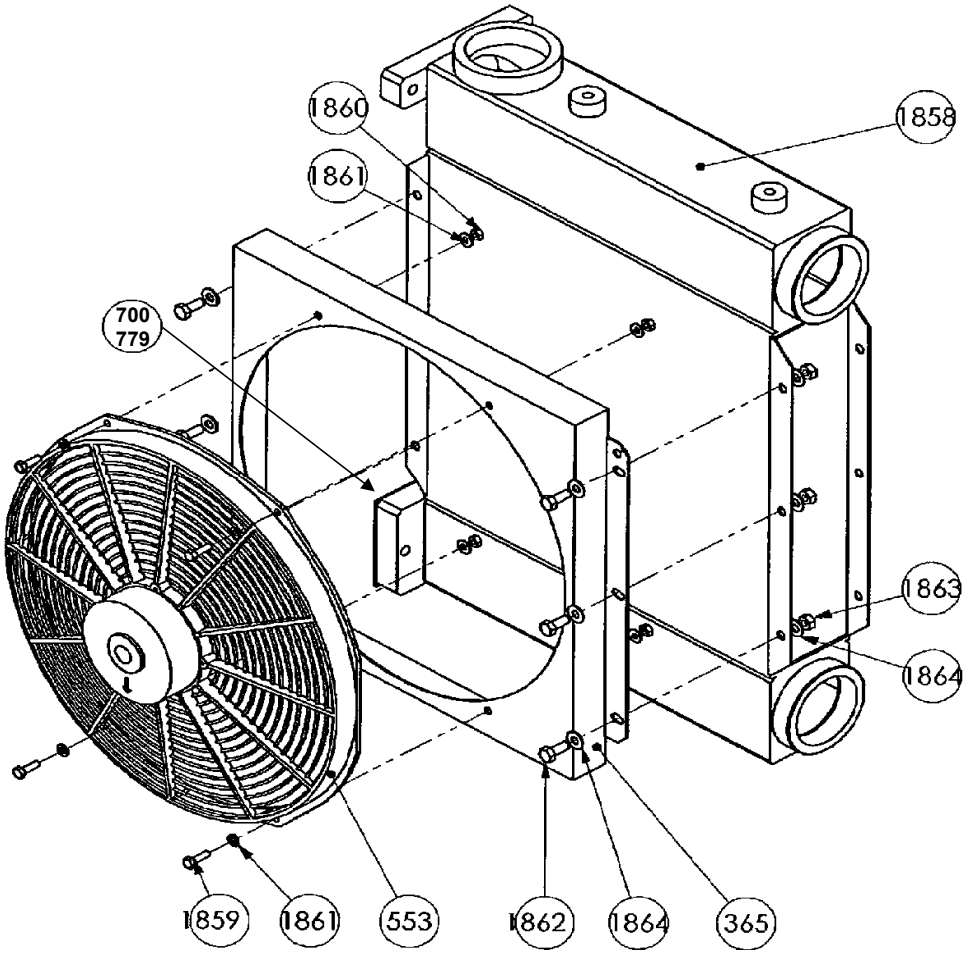

Intercooler

TOOLS (ONLY FOR MOUVEX MH6 SERVICE POINTS)

AUX229735

AUX229736

AUX229737

AUX229738

AUX229739

AUX229740

AUX229741

AUX229747

AUX234848

AUX316515

AUX316506

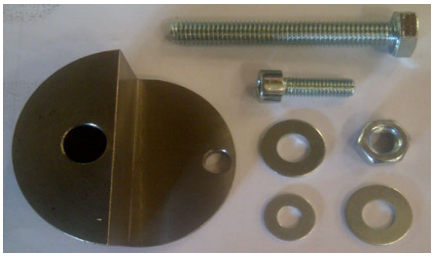

AUX316582

AUX316581

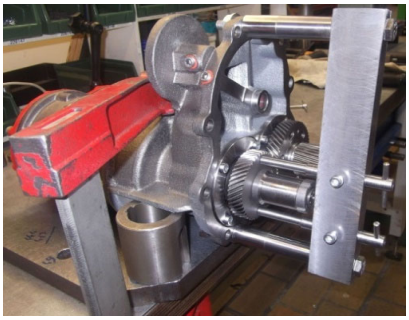

AUX316953

MH6

*** 1, 2 ,4… : Quantity in equipment - (1), (2), (4)… : Quantity in kit**

Item	Available	Description	Qty*	Ref.	Maintenance kit	Wear part
1	◆	**CASING [PSM]**	**1**	**AUX227012**		
2	◆	**GEAR BOX MH6 [PSM]**	**1**	**AUX229623**		
1107	◆	**EQUIPMENT KIT FOR MH6**	**1**	**AUX317730**		
140	◆	MH6 DISCHARGE FLANGE	1	AUX229751		
141	◆	GASKET	**2**	AUX227610	■	
142		SCREW	(2)			
144		WASHER	(2)			
202	◆	DISCHARGE PRESSURE HOSE MH6	**1**	AUX226674	■	●
1081	◆	GASKET PTO	**1**	AUX227442	■	
57 (1)	◆	OIL FILTER ASSEMBLY MX12_MH6	1	AUX319999	■	●
30		SEAL	(1)			
57A		OIL FILTER	(1)			
59	◆	**LIP SEAL**	**1**	**AUX227029**		●
145	◆	**SET OF SCREWS MH6 [PSM]**	**1**	**AUX315343**		
1009	◆	**PROTECTION GRID KIT SPD**	**1**	**AUX317106**		
1009	◆	**PROTECTION GRID KIT SPR - SPS**	**1**	**AUX317967**		
1072	◆	**COMPLETE BREATHER MERCEDES - DS**	**1**	**AUX317130**		
70	◆	PLUG	1	AUX218847		
1047		CONNECTOR	(1)			
1048		HOSE CLAMP	(2)			
1179		SEAL	(2)			
1180		O-RING	(1)			
1181		SEAL WASHER	(2)			
1182		SCREW	(2)			
1183		FEMALE TEE	(1)			
1184		SERRATED SOCKET	(2)			
1185		HOSE	(1)			
1186		HOSE	(1)			
1189		SEAL WASHER	(3)			
1192		CONNECTOR	(1)			
1194		BRACKET	(1)			
1195		SCREW	(2)			
1195A		SCREW	(1)			
1196		WASHER	(2)			
1196A		WASHER	(1)			
1197		WASHER	(2)			
1197A		WASHER	(1)			
1072	◆	**COMPLETE BREATHER SCANIA - DS**	**1**	**AUX320194**		
70	◆	PLUG	1	AUX218847		
1047		CONNECTOR	(1)			
1048		HOSE CLAMP	(2)			
1179		SEAL	(2)			
1180		O-RING	(1)			
1181		SEAL WASHER	(2)			
1182		SCREW	(2)			
1183		MALE TEE	(1)			
1184		SERRATED SOCKET	(2)			
1185		HOSE	(1)			
1186		HOSE	(1)			
1189		SEAL WASHER	(3)			
1192		CONNECTOR	(1)			
1194		BRACKET	(1)			
1195		SCREW	(2)			
1195A		SCREW	(1)			
1196		WASHER	(2)			
1196A		WASHER	(1)			
1197		WASHER	(2)			

(1) Only use filters recommended by MOUVEX in order to guarantee the proper functioning of the compressor.
This is equipped with a hightemperature resistant special seal.

MH6

*** 1, 2 ,4… : Quantity in equipment - (1), (2), (4)… : Quantity in kit**

Item	Available	Description	Qty*	Ref.	Maintenance kit	Wear part
1072	◆	**COMPLETE BREATHER VOLVO - DS**	**1**	**AUX318512**		
70	◆	PLUG	1	AUX218847		
1047		CONNECTOR	(1)			
1048		HOSE CLAMP	(2)			
1179		SEAL	(2)			
1180		O-RING	(1)			
1181		SEAL WASHER	(2)			
1182		SCREW	(2)			
1183		FEMALE TEE	(1)			
1184		SERRATED SOCKET	(2)			
1185		HOSE	(1)			
1186		HOSE	(1)			
1189		SEAL WASHER	(3)			
1192		CONNECTOR	(1)			
1194		BRACKET	(1)			
1195		SCREW	(2)			
1195A		SCREW	(1)			
1196		WASHER	(2)			
1196A		WASHER	(1)			
1197		WASHER	(2)			
1197A		WASHER	(1)			
1072	◆	**COMPLETE BREATHER ZF ASTRONIC_TRAXON - DS**	**1**	**AUX317138**		
70	◆	PLUG	1	AUX218847		
1047		CONNECTOR	(1)			
1179		SEAL	(2)			
1180		O-RING	(1)			
1181		SEAL WASHER	(2)			
1182		SCREW	(2)			
1183		FEMALE TEE	(1)			
1185		HOSE	(1)			
1186		HOSE	(1)			
1189		SEAL WASHER	(1)			
1192		CONNECTOR	(1)			
1072	◆	**COMPLETE BREATHER ZF ECOSPLIT - DS**	**1**	**AUX318769**		
70	◆	PLUG	1	AUX218847		
1047		CONNECTOR	(1)			
1048		HOSE CLAMP	(2)			
1179		SEAL	(2)			
1180		O-RING	(1)			
1181		SEAL WASHER	(2)			
1182		SCREW	(2)			
1183		FEMALE TEE	(1)			
1184		SERRATED SOCKET	(2)			
1185		HOSE	(1)			
1186		HOSE	(1)			
1189		SEAL WASHER	(3)			
1192		CONNECTOR	(1)			
1156	◆	**DRIVING GEAR RATIO C SET [PSM]**	**1**	**AUX315626**		
1156	◆	**DRIVING GEAR RATIO E SET [PSM]**	**1**	**AUX315627**		
6		GEAR	(1)			
55		KEY	(1)			
60		BEARING NUT	(1)			

MH6

*** 1, 2 ,4… : Quantity in equipment - (1), (2), (4)… : Quantity in kit**

Item	Available	Description	Qty*	Ref.	Maintenance kit	Wear part
1162	◆	**CASING KIT [PSM]**	**1**	**AUX316510**		
1	◆	CASING [PSM]	1	AUX227012		
41		WASHER	(2)			
43		PIN	(2)			
48		SERIAL NUMBER PLATE	(1)			
51		PLUG	(3)			
54		SCREW	(2)			
54A		PLUG	(2)			
58		RIVET	(2)			
59	◆	LIP SEAL	1	AUX227029		●
63		CIRCLIPS	(1)			
72		RING	(1)			
1115		PIN	(2)			
1160		SCREW	(2)			
1161		SEAL	(2)			
1191	◆	BREATHER PLUG KIT - MH6	2	AUX317142		
1163	◆	**SET OF BRONZE SEALS LS [PSM]**	**1**	**AUX316511**		
11		BRONZE SEAL	(2)			
1060		BRONZE SEAL	(2)			
1163A	◆	**SET OF BRONZE SEALS - DS [PSM]**	**1**	**AUX317961**		
11		BRONZE SEAL	(2)			
1060		BRONZE SEAL	(2)			
1164	◆	**BEARINGS KIT [PSM]**	**1**	**AUX316512**		
67		BALL BEARING	(2)			
67A		BALL BEARING	(2)			
67C		O-RING	(2)			
69		THRUST BALL BEARING	(2)			
1165	◆	**SYNCHRONIZATION GEARS MH6 B600 [PSM]**	**1**	**AUX316513**		
33A		WASHER	(6)			
34		SCREW	(6)			
189		SYNCHRONIZATION GEARS	(1)			
1166	◆	**SET OF SHIMS [PSM]**	**1**	**AUX316514**		
14		SET OF SHIMS	(2)			
18		SET OF SHIMS	(2)			
22		SET OF SHIMS	(2)			
1167	◆	**SET OF SCREWS KEYS PINS [PSM]**	**1**	**AUX316507**		
33A		WASHER	(6)			
34		SCREW	(6)			
43		PIN	(2)			
47		KEY	(2)			
55		KEY	(1)			
1066		SCREW	(8)			
1115		PIN	(2)			

MH6

*** 1, 2 ,4… : Quantity in equipment - (1), (2), (4)… : Quantity in kit**

Item	Available	Description	Qty*	Ref.	Maintenance kit	Wear part
1168	◆	**LIP SEAL KIT - LS [PSM]**	**1**	**AUX316508**		
59	◆	LIP SEAL	1	AUX227029		●
63		CIRCLIPS	(1)			
1500		MH6 SLEEVE LH	(1)			
1501		RIGHT LIP	(2)			
1504		SPACER	(2)			
1505		MH6 SLEEVE RH	(1)			
1168A	◆	**BRONZE SEALS KIT - DS [PSM]**	**1**	**AUX317965**		
15		CENTRIFUGATION DISK	(2)			
87		DEFLECTOR	(2)			
1500		BUSHING	(1)			
1501		RING	(2)			
1505		BUSHING	(1)			
1169	◆	**BEARING NUTS KIT [PSM]**	**1**	**AUX316509**		
60		BEARING NUT	(2)			
1191	◆	**BREATHER PLUG KIT - MH6 DS**	**1**	**AUX317142**		
1191	◆	**BREATHER PLUG KIT - MH6 LS**	**2**	**AUX317142**		
1531	◆	**BSCMH OIL - CAN 5 L**	**1**	**AUX318614**		
1531	◆	**BSCMH OIL - CAN 7 L**	**1**	**AUX318228**		
1531	◆	**BSCMH OIL - 3 CANS 5 L**	**1**	**AUX318443**		
1562	◆	**SERVICE TOOLS MH6 [PSM]**	**1**	**AUX316795**		
1550	◆	TOOL BRONZE SEAL EXTRACTOR [PSM]	1	AUX316506		
1551	◆	TOOL BRONZE SEAL ASSEMBLING (CASING) [PSM]	1	AUX229740		
1552	◆	TOOL SMALL LIP SEALS ASSEMBLING [PSM]	1	AUX229741		
1553	◆	TOOL BRONZE SEAL ASSEMBLING (GEAR BOX) [PSM]	1	AUX229735		
1554	◆	TOOL GEARBOX BEARING ASSEMBLING EXT RING [PSM]	1	AUX229736		
1555	◆	TOOL SLEEVES ASSEMBLING [PSM]	1	AUX229739		
1556	◆	TOOL LIP SEALS ASSEMBLING STABBING CONE [PSM]	1	AUX229747		
1557	◆	TOOL LIP SEALS ASSEMBLING LS [PSM]	1	AUX229738		
1557A	◆	TOOL ASSEMBLING FOR BRONZE SEALS - DS [PSM]	1	AUX234848		
1558	◆	TOOL GEARBOX BEARING ASSEMBLING [PSM]	1	AUX229737		
1559	◆	TOOL SHAFT ASSEMBLING (COMPARATOR) [PSM]	1	AUX316515		
1560	◆	TOOL SCREW LOCK [PSM]	1	AUX316581		
1561	◆	TOOL SYNCHRONIZATION GEARS LOCK [PSM]	1	AUX316582		
1592	◆	TOOL SYNCHRONIZATION GEARS LOCK [PSM]	1	AUX316953		
1913	◆	**KIT SUCTION PIPE ROTARY (SPR)**	**1**	**AUX316729**		
36		SCREW	(8)			
116	◆	O-RING	1	AUX200760	■	
117		SUCTION PIPE	(1)			
120		SCREW	(2)			
120A		SCREW	(2)			
860		WASHER	(2)			
1012	◆	O-RING	1	AUX229622	■	●
1512		SUCTION COVER	(1)			
1514	◆	CLAMP	2	AUX228804		
1913	◆	**KIT SUCTION PIPE DOWN (SPD)**	**1**	**AUX316730**		
36		SCREW	(6)			
117		SUCTION PIPE	(1)			
120A		SCREW	(2)			
1012	◆	O-RING	1	AUX229622	■	
1533		SCREW	(2)			
1913	◆	**KIT SUCTION PIPE STRAIGHT (SPS)**	**1**	**AUX316731**		
36		SCREW	(8)			
116	◆	O-RING	1	AUX200760	■	
117		SUCTION PIPE	(1)			
120		SCREW	(2)			
120A		SCREW	(2)			
860		WASHER	(2)			
1012	◆	O-RING	1	AUX229622	■	
1512		SUCTION COVER	(1)			
1514	◆	CLAMP	2	AUX228804		

ACCESSORIES

*** 1, 2 ,4… : Quantity in equipment - (1), (2), (4)… : Quantity in kit**

Item	Available	Description	Qty*	Ref.	Maintenance kit	Wear part
119	◆	**SILENCER ASSEMBLY**	**1**	**AUX315554**	■	
		(119+216+1816+1823+1879+1880) (2)				
1816	◆	GASKET	2	AUX220562	■	
216A	◆	**HOSE CLAMP KIT FOR MH6 SILENCER**	**1**	**AUX319981**		
216		HOSE CLAMP	(2)		■	
153	◆	**SUCTION HOSE KIT (MH6)**	**1**	**AUX315636**	■	
		(152A+164+165)				
152A	◆	HEAT SHRINKABLE SLEEVE (MH6)	2	AUX228763		
153A	◆	**COMPLEMENTARY CONNECTION KIT (TO FIT THE FILTER BEHIND THE CAB)**	**1**	**AUX315571**	■	
		(152+166+884)				
154	◆	**AIR FILTER ASSEMBLY FC7 WITH STRAIGHT OUTLET**	**1**	**AUX313690**	■	
154	◆	**AIR FILTER ASSEMBLY FC7 WITH 90° OUTLET**	**1**	**AUX315553**	■	
		(152+154+161+166+884)				
161	◆	FILTER ELEMENT FC7	1	AUX223650	■	●
175	◆	**INTERCOOLER ASSEMBLY**	**1**	**AUX322600**		
365	◆	INTERCOOLER SUCTION COVER	1	AUX230413		
553	◆	AXIAL FAN 24 VDC	1	AUX241118	■	
553	◆	AXIAL FAN 12 VDC	1	AUX231717	■	
700	◆	GASKET	1	AUX224729		
735**		NUT	(2)			
792**		SCREW	(2)			
793**		SCREW	(1)			
794**		WASHER	(3)			
1858	◆	INTERCOOLER	1	AUX224622		
1859		SCREW	(4)			
1860		NUT	(4)			
1861		WASHER	(8)			
1862		SCREW	(6)			
1863		NUT	(6)			
1864		WASHER	(12)			
524	◆	**CHECK RELIEF VALVE 2"_2.5" 2 BAR**	**1**	**AUX316109**	■	
524	◆	**CHECK RELIEF VALVE 2"_2.5" 2.3 BAR**	**1**	**AUX316108**	■	
524	◆	**CHECK RELIEF VALVE 2"_2.5" 2.5 BAR**	**1**	**AUX316107**	■	
		(759+761+1801+1805+1807+1808+1809+1812+1816+1818				
		+1819+1821+1823+1830+1831+1834+1835+1883)				
1812	◆	GASKET	1	AUX220525	■	●
1816	◆	GASKET	2	AUX220562	■	
1830	◆	FLANGE 2.5" BSP	1	AUX227439		
1883	◆	FLANGE 2" BSP	1	AUX227419		
1885	◆	**CHECK RELIEF VALVE 3" 2.5 BAR WITHOUT RELIEF VALVE**	**1**	**AUX316495**		
1801		CHECK VALVE CASING	(1)			
1809		VALVE	(1)			
1830	◆	FLANGE 2.5" BSP	1	AUX227439		
1831		OBTURATOR	(2)			
1834		SERIAL NUMBER PLATE	(1)			
1835		PIN	(2)			
1879	◆	SEALS_SCREWS KIT FOR CHECK VALVE	1	AUX314413	■	
759		SEAL WASHER	(1)			
1816	◆	GASKET	2	AUX220562	■	
1818		WASHER	(4)			
1821		NUT	(4)			
1823		SCREW	(4)			
1880	◆	SEALING KIT FOR CHECK VALVE (NOT ASSEMBLED)	1	AUX314412	■	
1805	◆	SPRING	1	AUX220708		
1807		WASHER	(1)			
1808		BUSHING	(1)			
1812	◆	GASKET	1	AUX220525	■	●
1819		CIRCLIPS	(1)			
1883	◆	FLANGE 2" BSP	1	AUX227419		
778	◆	**COMPLETE RELIEF VALVE 2 BAR**	**1**	**AUX313477**	■	
778	◆	**COMPLETE RELIEF VALVE 2.3 BAR**	**1**	**AUX313494**	■	
778	◆	**COMPLETE RELIEF VALVE 2.5 BAR**	**1**	**AUX313473**	■	
		(759+761)				
1100	◆	**ELBOW 90°**	**1**	**AUX227080**	■	
1118	◆	**ELBOW 45°**	**1**	**AUX227389**	■	
1881	◆	**FLANGE KIT 2" BSP**	**1**	**AUX315567**	■	
1816	◆	GASKET	2	AUX219281	■	
1830	◆	FLANGE 2" BSP	2	AUX227419		
1879		WASHER	(8)			
1880		SCREW	(8)			

(2) Item 1823 to be used only if the check relief valve is flanged on the silencer.