P.L. : 1401-Q01

Effective	May 2026
Replaces	August 2024

PARTS LIST
ACCESSORIES
SCREW COMPRESSOR
B600 - Mistral - Typhon II

Keep this parts lists with Installation, Operation and Maintenance Instructions.

To order the required spare parts, indicate the desired Reference(s).

- Sets of parts or parts available to order.

Z.I. la Plaine des Isles - 2 rue des Caillottes F-89000 AUXERRE - France
Tél : +33 (0)3 86 49 86 30
contact.mouvex@psgdover.com • www.mouvex.com

CHECK RELIEF VALVE

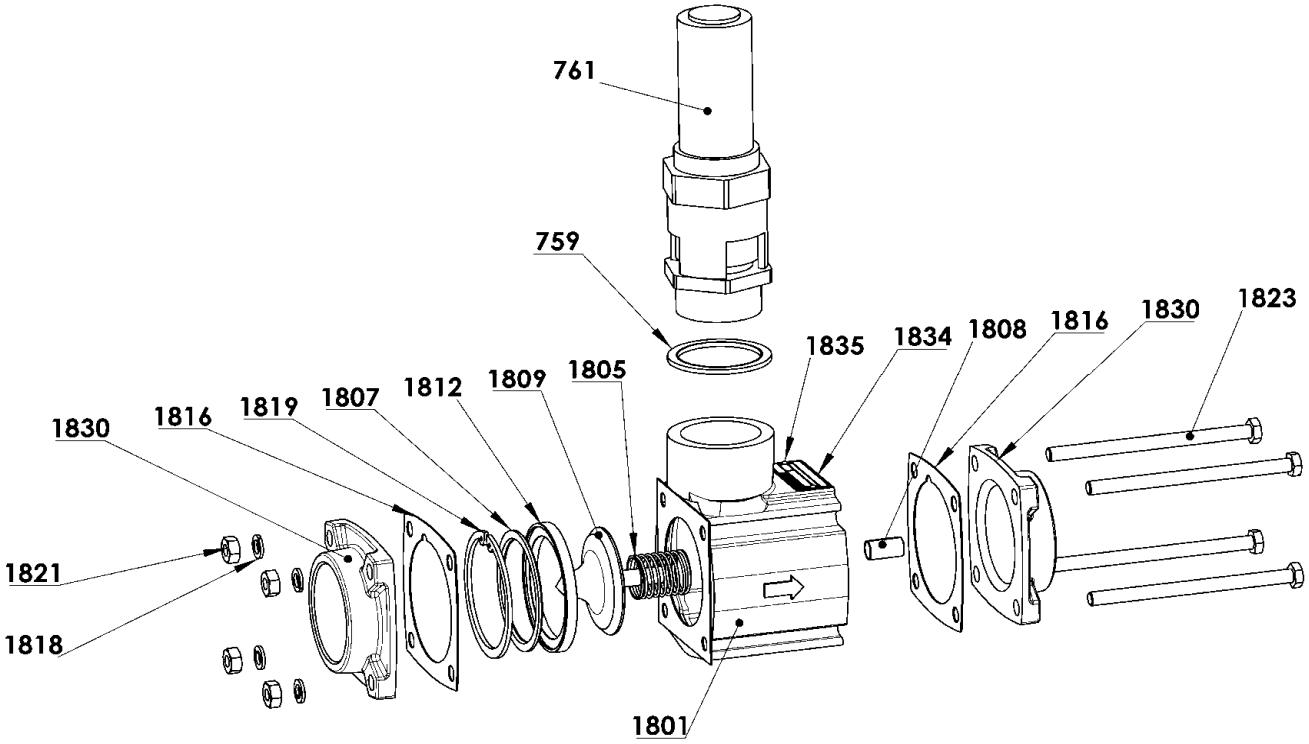

TORQUE LIMITER

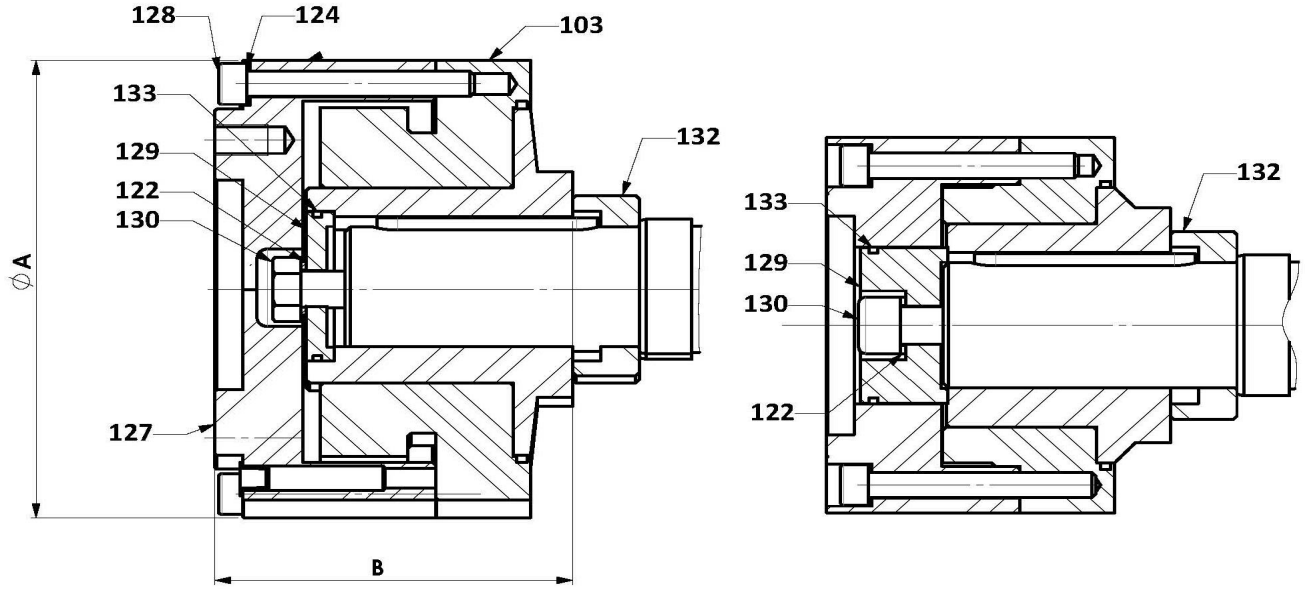

Version A

Version B

SILENCER

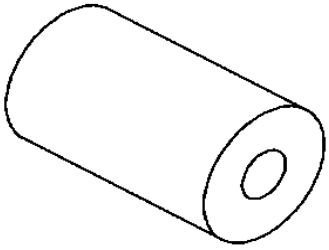

AIR FILTER

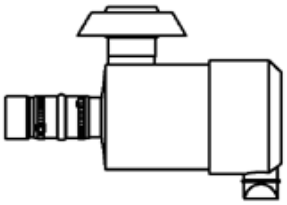

WITH STRAIGHT OUTLET (180°)

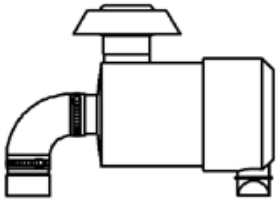

WITH 90° OUTLET

FLANGE KIT & STORZ CONNECTOR KIT

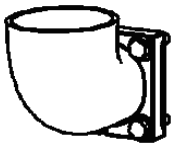

90°

180°

FLANGE KIT

STORZ CONNECTOR KIT

HYDRAULIC TRUNK KIT FOR MOTOR

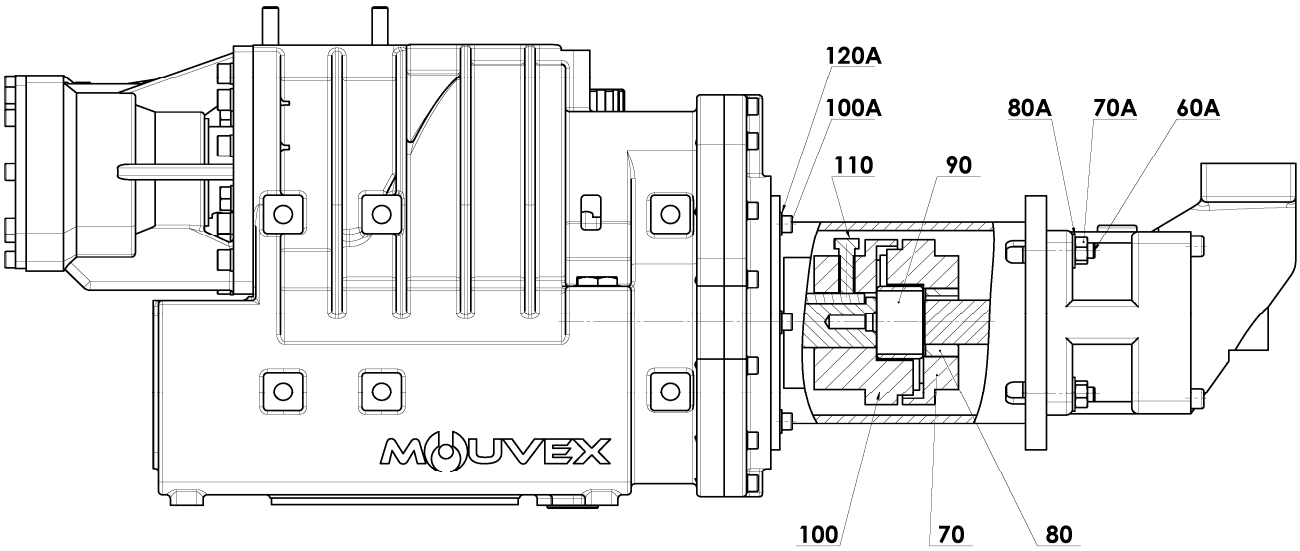

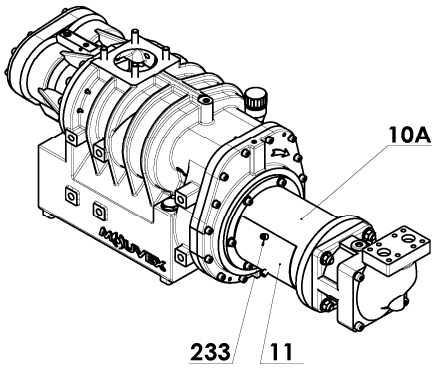

INTERCOOLER

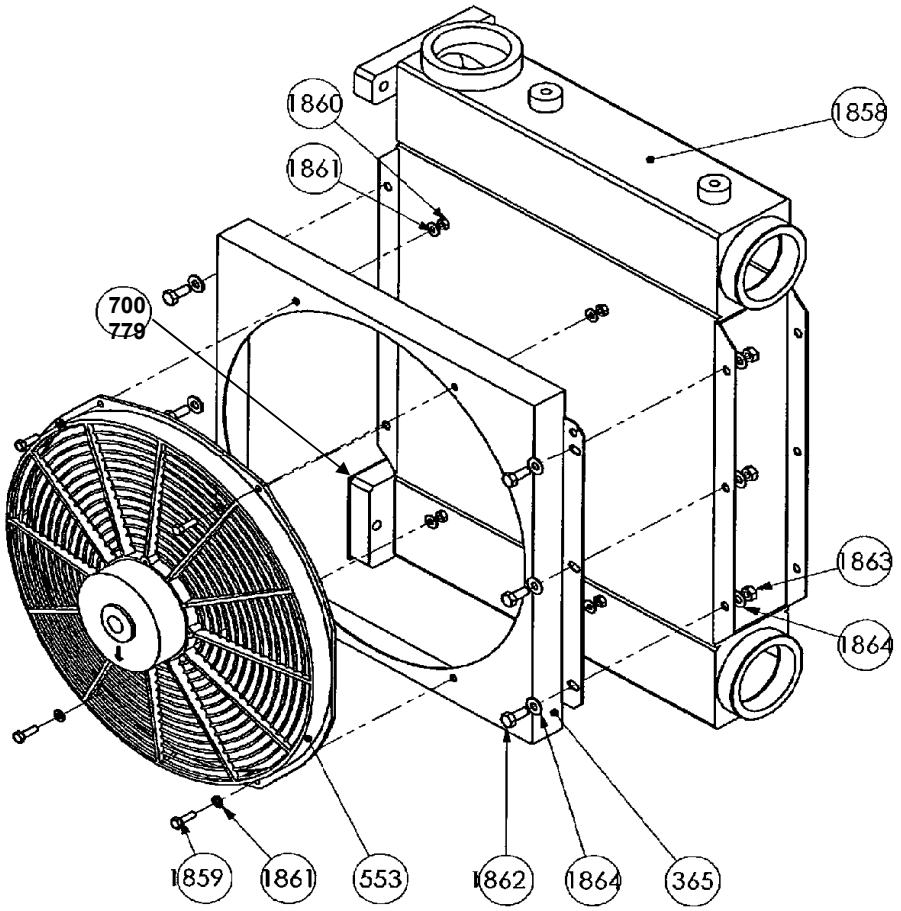

OIL COOLER

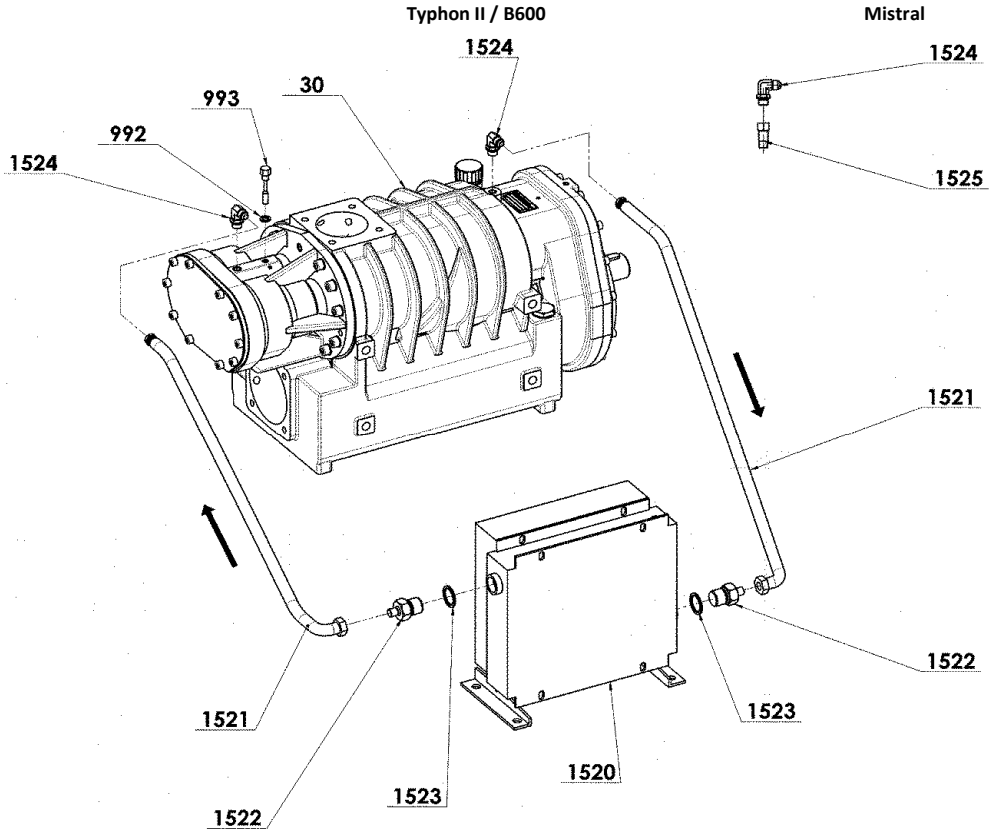

ACCESSORIES

*** 1, 2 ,4… : Quantity in equipment - (1), (2), (4)… : Quantity in kit** **** Not shown on drawings**

Item	Available	Description	Qty*	Ref.	Maintenance kit	Wear part
		CHECK RELIEF VALVE				
524	◆	**CHECK RELIEF VALVE 2.5" 2 BAR**	**1**	**AUX316101**	■	
524	◆	**CHECK RELIEF VALVE 2.5" 2.3 BAR**	**1**	**AUX316099**	■	
524	◆	**CHECK RELIEF VALVE 2.5" 2.5 BAR**	**1**	**AUX316103**	■	
524	◆	**CHECK RELIEF VALVE 3" 2 BAR**	**1**	**AUX316102**	■	
524	◆	**CHECK RELIEF VALVE 3" 2.3 BAR**	**1**	**AUX316100**	■	
524	◆	**CHECK RELIEF VALVE 3" 2.5 BAR**	**1**	**AUX316104**	■	
761		RELIEF VALVE	(1)			
1801		CHECK VALVE CASING	(1)			
1809		VALVE	(1)			
1830	◆	FLANGE 2.5" BSP	2	AUX227439		
1830	◆	FLANGE 3" BSP	2	AUX228185		
1834		SERIAL NUMBER PLATE	(1)			
1835		RIVET	(2)			
1879	◆	SEALS_SCREWS KIT FOR CHECK VALVE	1	AUX314413		
759		SEAL WASHER	(1)			
1816	◆	GASKET FLANGE	2	AUX220562	■	
1818		WASHER	(4)			
1821		NUT	(4)			
1823		SCREW	(4)			
1880	◆	SEALING KIT FOR CHECK VALVE	1	AUX314412		
1805	◆	SPRING	1	AUX220708		
1807		WASHER	(1)			
1808		BUSH	(1)			
1812	◆	SEAL	1	AUX220525	■	●
1819		CIRCLIPS	(1)			
778	◆	**COMPLETE RELIEF VALVE 2 BAR**	**1**	**AUX313477**	■	
778	◆	**COMPLETE RELIEF VALVE 2.3 BAR**	**1**	**AUX313494**	■	
778	◆	**COMPLETE RELIEF VALVE 2.5 BAR**	**1**	**AUX313473**	■	
759		SEAL WASHER	(1)			
761		RELIEF VALVE	(1)			●
1885	◆	**CHECK RELIEF VALVE 2.5" WITHOUT RELIEF VALVE**	**1**	**AUX315580**		
1885	◆	**CHECK RELIEF VALVE 2"_2.5" WITHOUT RELIEF VALVE**	**1**	**AUX316495**		

		TORQUE LIMITER				
124	◆	**COMPLETE TORQUE LIMITER 800 N.M**	**1**	**AUX317145**	■	●
124	◆	**COMPLETE TORQUE LIMITER 950 N.M**	**1**	**AUX312548**	■	●
125		TORQUE LIMITER	(1)			
132		SPACER	(1)			

		SILENCER				
119	◆	**SILENCER**	**1**	**AUX225284**		

ACCESSORIES

*** 1, 2 ,4… : Quantity in equipment - (1), (2), (4)… : Quantity in kit** **** Not shown on drawings**

Item	Available	Description	Qty*	Ref.	Maintenance kit	Wear part
		AIR FILTER ASSEMBLY				
		For B600 - MISTRAL :				
154	◆	**FC7 WITH STRAIGHT OUTLET**	**1**	**AUX313690**		
154	◆	**FC7 WITH 90° OUTLET**	**1**	**AUX315553**		
161**		FILTER ELEMENT FC7	1	AUX223650	■	●
		For B600 - MISTRAL - TYPHON II :				
154	◆	**FC10 WITH STRAIGHT OUTLET**	**1**	**AUX313692**		
154	◆	**FC10 WITH 90° OUTLET**	**1**	**AUX313694**		
161**		FILTER ELEMENT FC10	1	AUX215653	■	●
		For B600 - MISTRAL - TYPHON II :				
153	◆	**CONNECTION KIT HOSE FOR FILTER (1,5 M)**	**1**	**AUX313689**	■	
164**		HOSE	1			
165**		HOSE CLAMP	2			

		COMPRESSOR FLANGE KIT				
		INLET STRAIGHT FLANGE KIT FOR :				
98	◆	**TYPHON II**	**1**	**AUX313693**		
98	◆	**B600 / MISTRAL**	**1**	**AUX312169**		
		GASKET INLET FLANGE FOR :				
116B**		TYPHON II	1	AUX215088	■	
116**		B600 / MISTRAL	1	AUX219281	■	
117**		INLET FLANGE	(1)			
120**		SCREW	(4)			
121**		WASHER	(4)			
		INLET ELBOW FLANGE KIT FOR :				
98	◆	**TYPHON II**	**1**	**AUX313687**		
98	◆	**B600 / MISTRAL**	**1**	**AUX313688**		
		GASKET INLET FLANGE FOR :				
116A**		TYPHON II	1	AUX215088	■	
116C**		B600 / MISTRAL	1	AUX219281	■	
117**		INLET FLANGE	(1)			
120**		SCREW	(4)			
121**		WASHER	(4)			
1026**		BRACKET	(2)			
97	◆	**DISCHARGE FLANGE KIT 2"1/2**	**1**	**AUX312168**		
140**		DISCHARGE FLANGE	(1)			
141B**		GASKET	1	AUX219281	■	
142**		NUT	(4)			
144**		WASHER	(4)			

		INTERCOOLER				
175	◆	**INTERCOOLER ASSEMBLY**	**1**	**AUX322600**		
365	◆	INTERCOOLER SUCTION COVER	1	AUX230413		
553	◆	AXIAL FAN 24 VDC	1	AUX241118	■	
553	◆	AXIAL FAN 12 VDC	1	AUX231717	■	
700	◆	GASKET	1	AUX224729		
735**		NUT	(2)			
792**		SCREW	(2)			
793**		SCREW	(1)			
794**		WASHER	(3)			
1858	◆	INTERCOOLER	1	AUX224622		
1859		SCREW	(4)			
1860		NUT	(4)			
1861		WASHER	(8)			
1862		SCREW	(6)			
1863		NUT	(6)			
1864		WASHER	(12)			

ACCESSORIES

*** 1, 2 ,4… : Quantity in equipment - (1), (2), (4)… : Quantity in kit** **** Not shown on drawings**

Item	Available	Description	Qty*	Ref.	Maintenance kit	Wear part
		OIL COOLER				
1519	◆	**OIL COOLER KIT 24V**	**1**	**AUX315637**		
1519	◆	**OIL COOLER KIT 12V**	**1**	**AUX316718**		
990	◆	COMPRESSOR CONNECTING KIT FOR OIL COOLER	1	AUX313657		
992		SEAL	(1)			
993		PLUG	(1)			
1520	◆	OIL COOLER 24V	1	AUX230087		
1520	◆	OIL COOLER 12V	1	AUX230088		
1523		SEAL WASHER	(2)			
1529	◆	OIL COOLER CONNECTING KIT	1	AUX315638		
1521		HOSE (2 M)	(2)			
1522		CONNECTOR	(2)			
1524		ELBOW CONNECTOR	(2)			
1525		ADAPTATER	(1)			
1531	◆	CAN OF 1.5 LITRES (BSC3 OIL)	(1)	AUX316636		

		OTHERS ACCESSORIES				
		HYDRAULIC TRUNK KIT FOR PARKER MOTOR :				
1205	◆	**F12-40**	**1**	**AUX311989**		
1205	◆	**F12-60**	**1**	**AUX311284**		
1205	◆	**F12-80**	**1**	**AUX311835**		

124	◆	**STORZ CONNECTOR KIT 3" HOSE THREADED MALE G2.5**	**1**	**AUX316791**		
187		PLUG	(1)			
188		CONNECTOR	(1)			