P.L. :	1401-AP01
Effective	July 2026
Replaces	June 2024

PARTS LIST

DIRECT DRIVE PACKAGES

DDIC MX12

Keep this parts lists with Installation, Operation and Maintenance Instructions.

To order the required spare parts, indicate the desired Reference(s).

- Sets of parts or parts available to order.

COMPRESSOR : See PL Compressor

DISASSEMBLING THE COMPRESSOR IS FORBIDDEN AND VOIDS THE WARRANTY.
IF A REPAIRING IS NEEDED, THE COMPRESSOR MUST BE RETURNED TO OUR WORKSHOP.
THE ITEMS SPECIFIED ON THAT PARTS LIST WHICH HAVE NOT REFERENCE CANNOT BE SUPPLIED AS SPARE PARTS.

Z.I. la Plaine des Isles - 2 rue des Caillottes F-89000 AUXERRE - France
Tél : +33 (0)3 86 49 86 30
contact.mouvex@psgdover.com • www.mouvex.com

DIRECT DRIVE PACKAGES
DDIC MX12

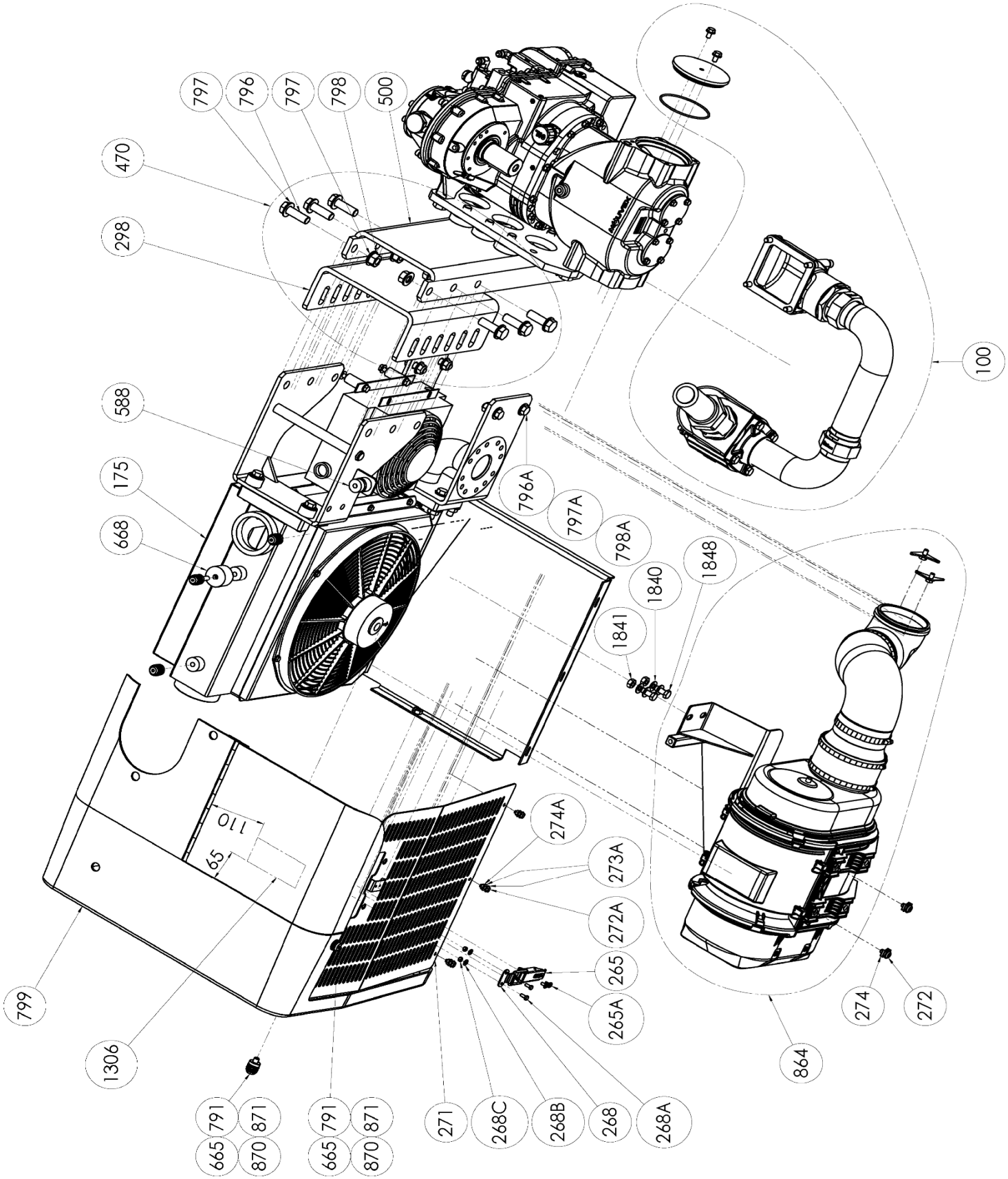

SUCTION ASSEMBLY

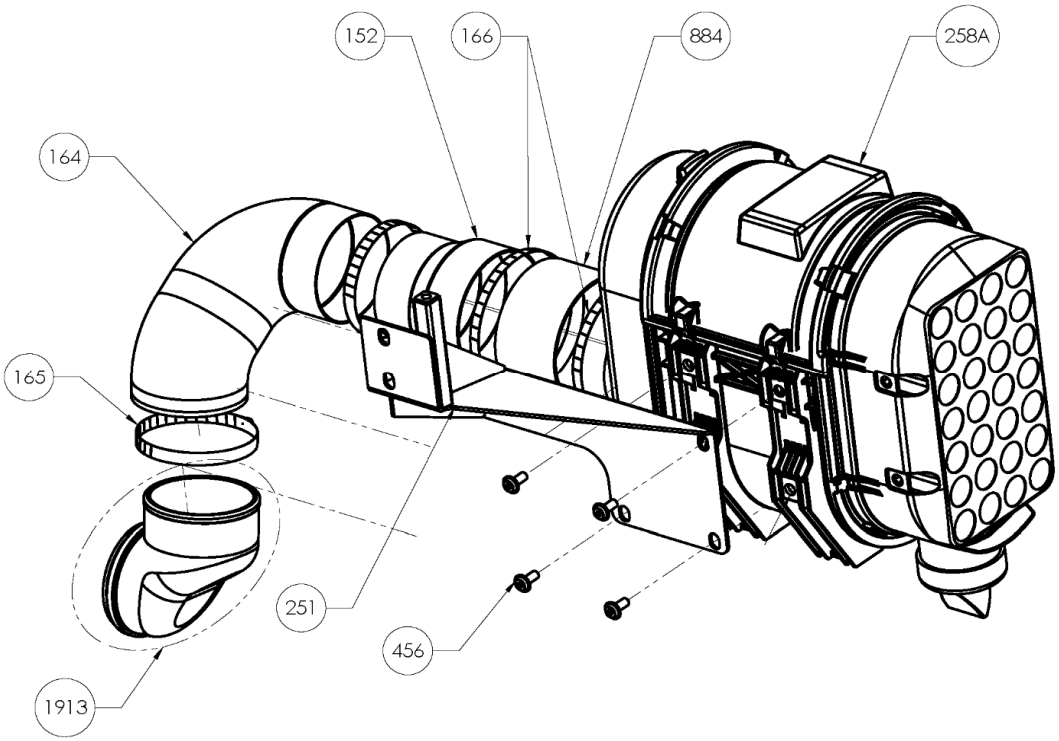

HOLDER ASSSEMBLY

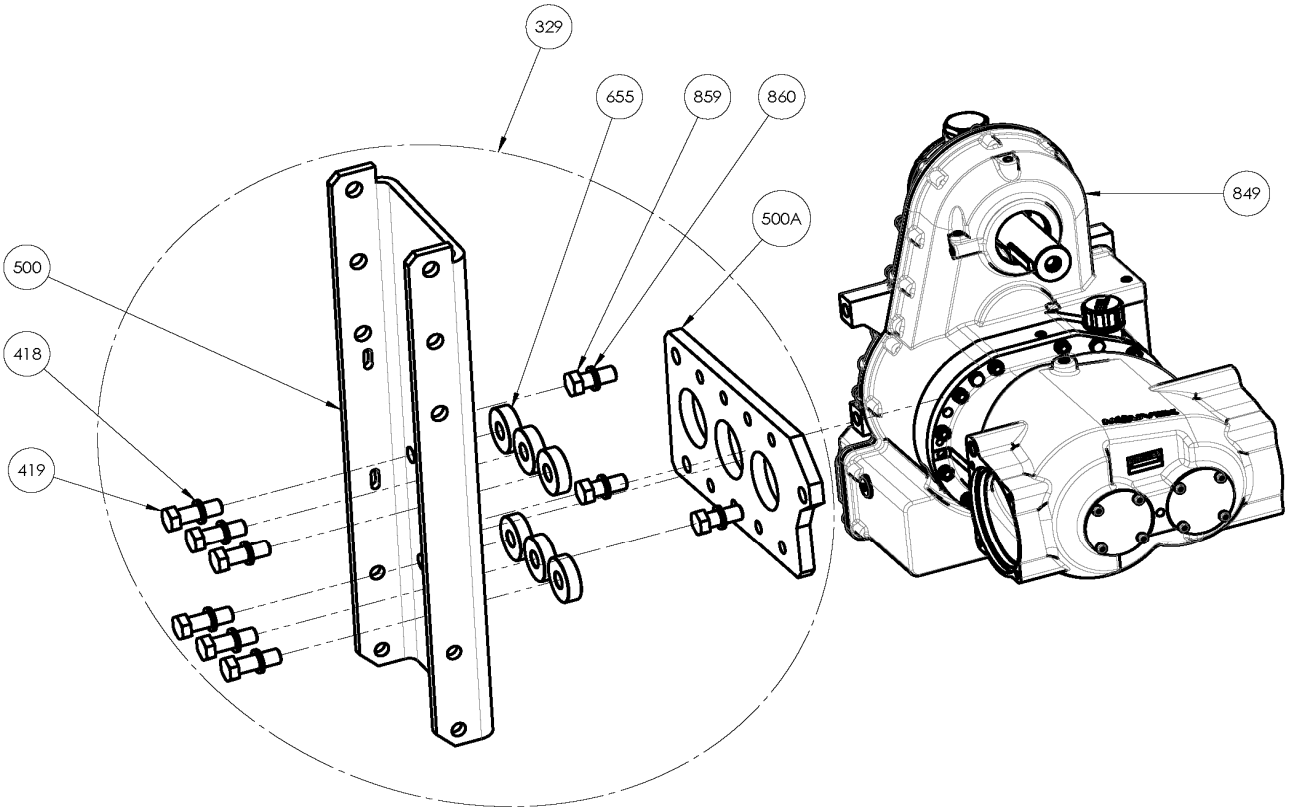

ACCESSORIES

Check and relief valve

Discharge assembly

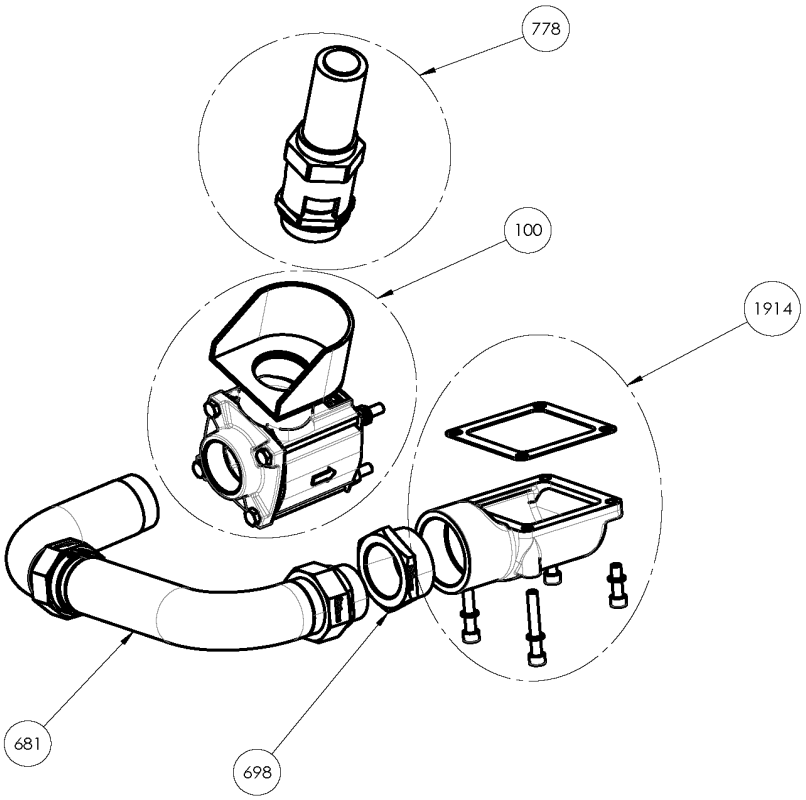

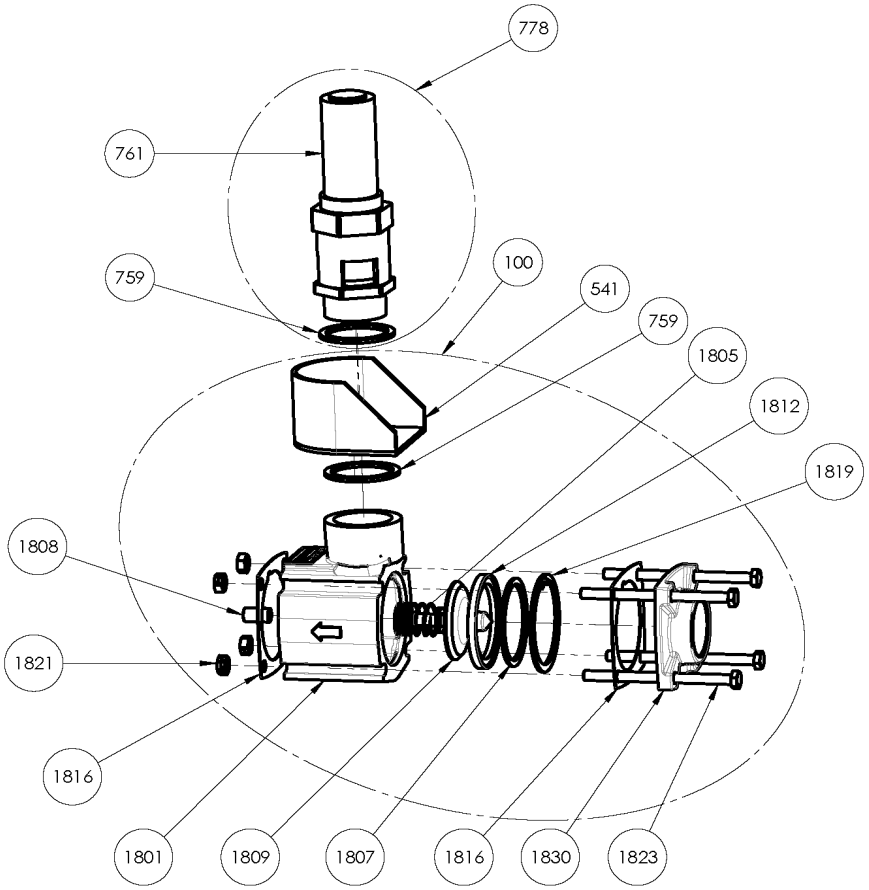

ACCESSORIES

Intercooler

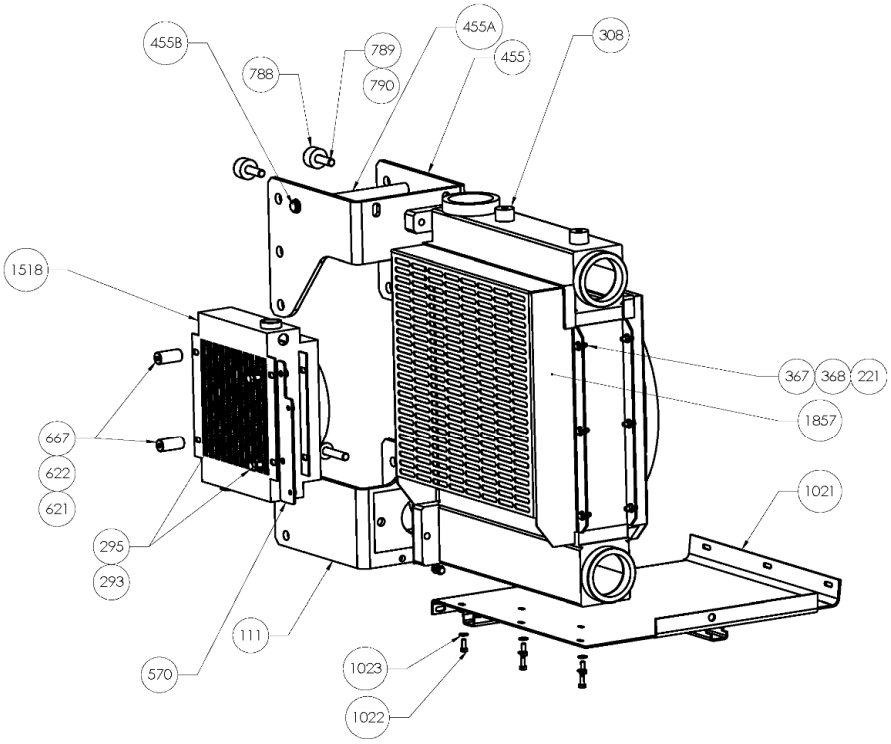

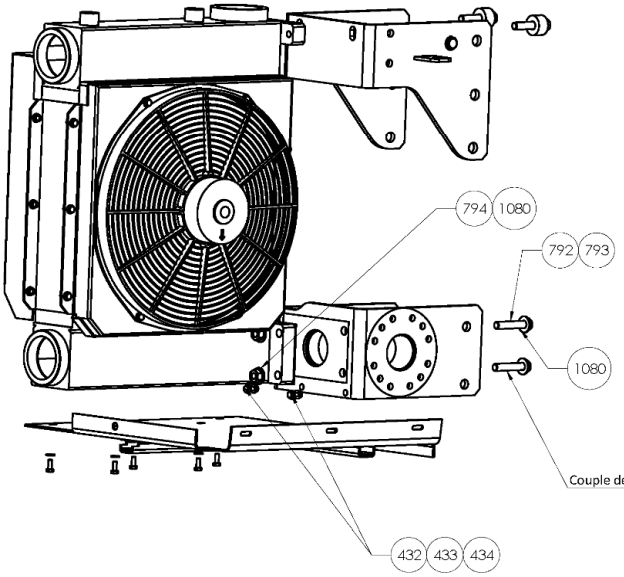

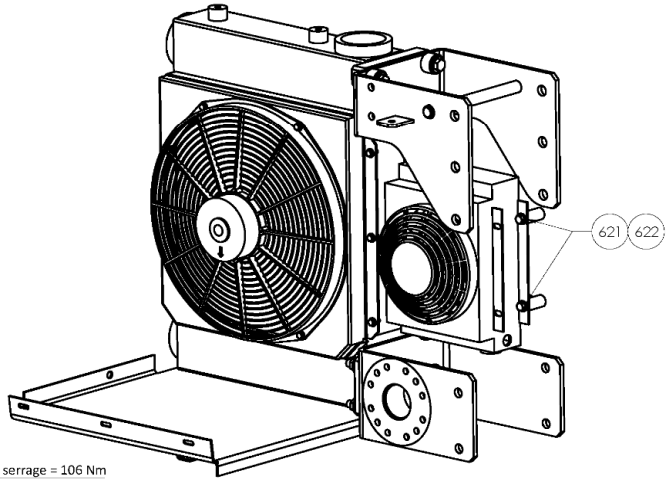

DDIC MX12

*** 1, 2 ,4… : Quantity in equipment - (1), (2), (4)… : Quantity in kit**

Item	Available	Description	Qty*	Ref.	Maintenance kit	Wear part
124	◆	**COMPLETE TORQUE LIMITER 800 N.M**	**1**	**AUX317145**	■	●
125		TORQUE LIMITER	(1)			
132		SPACER	(1)			
175	◆	**DDIC MX12 INTERCOOLER ASSEMBLY**	1	**AUX321796**		
175	◆	**DDIC MX12 INTERCOOLER ASSEMBLY WITH DEFLECTOR**	1	**AUX321915**		
308	◆	INTERCOOLER ASSEMBLY	1	AUX322600		
365	◆	INTERCOOLER SUCTION COVER	1	AUX230413		
553	◆	AXIAL FAN	1	AUX241118	■	●
1858	◆	INTERCOOLER	1	AUX224622		
1859		SCREW	(4)			
1860		NUT	(4)			
1861		WASHER	(8)			
1862		SCREW	(6)			
1863		NUT	(6)			
1864		WASHER	(12)			
700	◆	GASKET	1	AUX224729		
735		NUT	(2)			
792		SCREW	(2)			
793		SCREW	(1)			
794		WASHER	(3)			
1857	◆	INTERCOOLER DISCHARGE COVER (AUX321796)	1	AUX244412		
1857	◆	INTERCOOLER DISCHARGE DEFLECTOR (AUX321915)	1	AUX245390		
111		BRACKET	1			
1080		WASHER	(2)			
1021	◆	BRACKET	1	AUX244377		
1022		SCREW	(5)			
367		SCREW	(6)			
1023		WASHER	(5)			
368		WASHER	(10)			
433		WASHER	(4)			
432		SCREW	(2)			
221		NUT	(4)			
434		NUT	(2)			
455		BRACKET	(1)			
789		SCREW	(2)			
790		WASHER	(2)			
788	◆	VIBRATION PAD	2	AUX223046		
455A		SLINGING SHAFT	(1)			
455B		CIRCLIPS	(2)			
1518	◆	OIL COOLER KIT	1	AUX318821		
667		SPACER	(2)			
622		SCREW	(2)			
293		WASHER	(2)			
621		WASHER	(2)			
570		BRACKET	(1)			
295		SCREW	(2)			
329	◆	**HOLDER ASSSEMBLY DDIC MX12**	**1**	**AUX321795**		
500		HOLDER DDIC	(1)			
500A		BRACKET	(1)			
655		SPACER	(6)			
419		SCREW	(6)			
859		SCREW	(3)			
418		WASHER	(6)			
860		WASHER	(3)			
470	◆	DDIC MX12 HOLDER BENDED BRACKET AND FASTENINGS ASSEMBLY	1	**AUX321890**		
298	◆	BENDED BRACKET (LEFT)	1	AUX244383	■	
299	◆	BENDED BRACKET (RIGHT)	1	AUX244384	■	
796		SCREW	(6)			
797		WASHER	(12)			
798		NUT	(6)			

DDIC MX12

*** 1, 2 ,4… : Quantity in equipment - (1), (2), (4)… : Quantity in kit**

Item	Available	Description	Qty*	Ref.	Maintenance kit	Wear part
588	◆	**RESTRICTION INDICATOR ASSEMBLY DDIC MX12**	**1**	**AUX314669**	■	
158		RESTRICTION INDICATOR	(1)			
377		BRACKET	(1)			
393		CONNECTOR	(1)			
1878		ADAPTATER	(1)			
408		WASHER	(2)			
438		SCREW	(2)			
574		HOSE	(1)			
578		ELBOW 90°	(1)			
864	◆	DDIC MX12 SUCTION ASSEMBLY	1	AUX321798		
251		BRACKET	(1)			
1848		SCREW	(2)			
1840		WASHER	(4)			
1841		NUT	(2)			
258A	◆	POWERCORE PSD10 AIR FILTER	1	AUX225619		
456		SCREW	(4)			
884		STRAIGHT HUMP	(1)			
166		HOSE CLAMP	(2)			
152		REDUCER	(1)			
164		HOSE	(1)			
165		HOSE CLAMP	(2)			
1913		KIT ELBOW 90	(1)			
1853	◆	**DDIC MX12 DISCHARGE ASSEMBLY**	**1**	**AUX321821**		
681	◆	DISCHARGE PRESSURE HOSE	1	AUX321794		●
698		REDUCER	(1)			
1914	◆	DISCHARGE FLANGE WITH SEAL AND SCREWS	1	AUX319980		
140		DISCHARGE ELBOW	(1)			
141		DISCHARGE GASKET	(1)			
142		SCREW	(2)			
142A		SCREW	(2)			
144		WASHER	(4)			
100	◆	**DDIC MX12 CHECK VALVE ASSEMBLY**	**1**	**AUX321797**		
1801		CHECK VALVE CASING	(1)			
1809		VALVE	(1)			
1845		WASHER	(1)			
1880	◆	SEALING KIT FOR CHECK VALVE (NOT ASSEMBLED)	1	AUX314412	■	
1805	◆	SPRING	1	AUX220708		
1808		BUSHING	(1)			
1812	◆	GASKET	1	AUX220525	■	●
1819		CIRCLIPS	(1)			
1807		WASHER	(1)			
1816	◆	FLANGE GASKET	2	AUX220562		
1830	◆	FLANGE 2" BSP	1	AUX227419		
1823		SCREW	(4)			
1821		NUT	(4)			
759		WASHER	(1)			
541		RELIEF VALVE DEFLECTOR	(1)			
778	◆	**COMPLETE RELIEF VALVE 2,3 BAR**	**1**	**AUX313494**	■	
778	◆	**COMPLETE RELIEF VALVE 2,5 BAR**	**1**	**AUX313473**	■	
778	◆	**COMPLETE RELIEF VALVE 2 BAR**	**1**	**AUX313477**	■	
759		WASHER	(1)			
761		RELIEF VALVE	(1)			●
849	◆	**MX12 S-15R/**	**1**			
849	◆	**MX12 S-18L/**	**1**			
849	◆	**MX12 S-20R/**	**1**			

DDIC MX12

*** 1, 2 ,4… : Quantity in equipment - (1), (2), (4)… : Quantity in kit**

Item	Available	Description	Qty*	Ref.	Maintenance kit	Wear part
850	◆	**DDIC MX12 COVER ASSEMBLY**	**1**	**AUX321830**		
271		GRID	1			
272A		SCREW	(3)			
273A		WASHER	(6)			
274A		NUT	(3)			
272		SCREW	(2)			
274		NUT	(2)			
668		SPACER	(1)			
664		SCREW	(1)			
791		SCREW	(4)			
665		WASHER	(5)			
870		RING	(5)			
871		SPACER	(5)			
872		NUT	(2)			
1306		FOAM	(1)			
799	◆	DDIC COVER	1	AUX321799		
265		LATCH	(1)			
265A		SCREW	(2)			