Instructions 1012-E00 (En)

Section	1012
Effective	May 2025
Replaces	May 2019

Original instructions

A55 A pump

INSTALLATION

OPERATION

MAINTENANCE

EC CERTIFICATE OF CONFORMITY :

The EC Certificate of Conformity (paper version) is systematically attached to the equipment when shipped.

WARRANTY :

A II Series pumps are covered 24 months by warranty within the limits mentioned in our General Sales Conditions. In case of a use other than that mentioned in the Instructions manual, and without preliminary agreement of MOUVEX, warranty will be canceled.

a DOVER company

Z.I. La Plaine des Isles - F 89000 AUXERRE - FRANCE
Tel. : +33 (0)3.86.49.86.30 - Fax : +33 (0)3.86.49.87.17
contact.mouvex@psgdover.com - www.mouvex.com

Your distributor :

ECCENTRIC PISTON PUMP
MOUVEX PRINCIPLE
SAFETY, STORAGE, INSTALLATION AND MAINTENANCE INSTRUCTIONS
MODEL : A55 A

These Instructions contains important information concerning the reception, the installation, the operation, the adaptation, the dismantling, the maintenance and the disposal of the A55A pump.

These Instructions MUST accompany the pump. Read these whole instructions before using the pump.

If necessary, do not remove the warning and use label stickers that are found on the pump.

The information given in this document are based on the most recent data available at the time of its diffusion. MOUVEX keeps the right to modify without prior notice information and illustrations contained in this document.

USED PRESSURE UNITS

Unit without suffix :
Differential pressure, for example, pressure difference between equipment suction and discharge.

Unit with suffix "a" :
Absolute pressure.

Unit with suffix "g" :
Gauge pressure, given regarding to atmospheric pressure (~101325 Pa, taken at 1 bar / 14,5 psi in this IOM).

Example :
P_{suc} = -0,2 barg = 0,8 bara
P_{dis} = 8,8 barg = 9,8 bara
ΔP = P_{dis} - P_{suc} = 9 bar

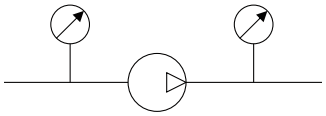

Definition of safety symbols

This is a SAFETY ALERT SYMBOL.
When you see this symbol on the product, or in the manual, look for one of the following signal words and be alert to the potential for personal injury, death or major property damage.

Warns of hazards that WILL cause serious personal injury, death or major property damage.

Warns of hazards that CAN cause serious personal injury, death or major property damage.

Warns of hazards that CAN cause personal injury or property damage.

NOTICE
Indicates special instructions which are very important and must be followed.

TABLE OF CONTENTS — *Page*

1. GENERAL DATA 3
1.1 Principle of operation 3
1.2 Identification and pump marking 3
2. GENERAL SAFETY INFORMATIONS 4
3. INSTALLATION 5
3.1 Reception 5
3.2 Installation design 5
3.3 Installation and pump protection 6
3.4 Hoisting devices 7
3.5 Unit assembly 7
4. USE 8
4.1 Noise level 8
4.2 Commissioning 8
4.3 Operation without any pumped product 9
4.4 Shutting down the pump 9
5. OPENING OF THE PUMP 10
5.1 Preparation 10
5.2 Reverse of main rotation direction 11
5.3 Cylinder - piston 13
5.4 Bushings 16
5.5 Mechanical seal 18
5.6 Bearing 22
5.7 Piston bearing 22
5.8 Slide block 23
5.9 Slide block shaft 23
5.10 Slide block pads 24
5.11 Pusher 24
5.12 Relief valve 25
5.13 O-rings replacement 27
5.14 Stirrup 28
6. MAINTENANCE 29
6.1 Greasing 29
6.2 Checking of parts 29
7. PARTICULAR VARIANTS 30
7.1 Pump with heating jacket 30
8. STORAGE 30
8.1 Short duration (≤ 1 month) 30
8.2 Long duration (> 1 month) 30
8.3 Restarting 30
9. SCRAPPING 30
10. TECHNICAL CHARACTERISTICS 31
10.1 Weight and center of gravity 31
10.2 Overall dimensions 31
10.3 Curves 31
10.4 Operation limits and characteristics 31
11. TROUBLESHOOTING 34

1. GENERAL DATA

1.1 Principle of operation

Pumps MOUVEX A II Series are volumetric pumps with eccentric piston (following the MOUVEX™ principle).

When piston moves inside cylinder, driven by eccentric shaft, it creates four chambers that increase and decrease, thus creating suction and discharge.

These chambers are moving two by two with a 180° opposition, thus giving to fluid crossing the pump a constant flow rate.

1.2 Identification and pump marking

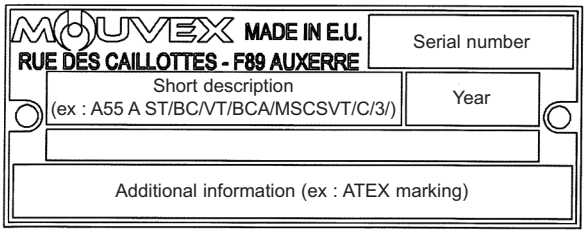

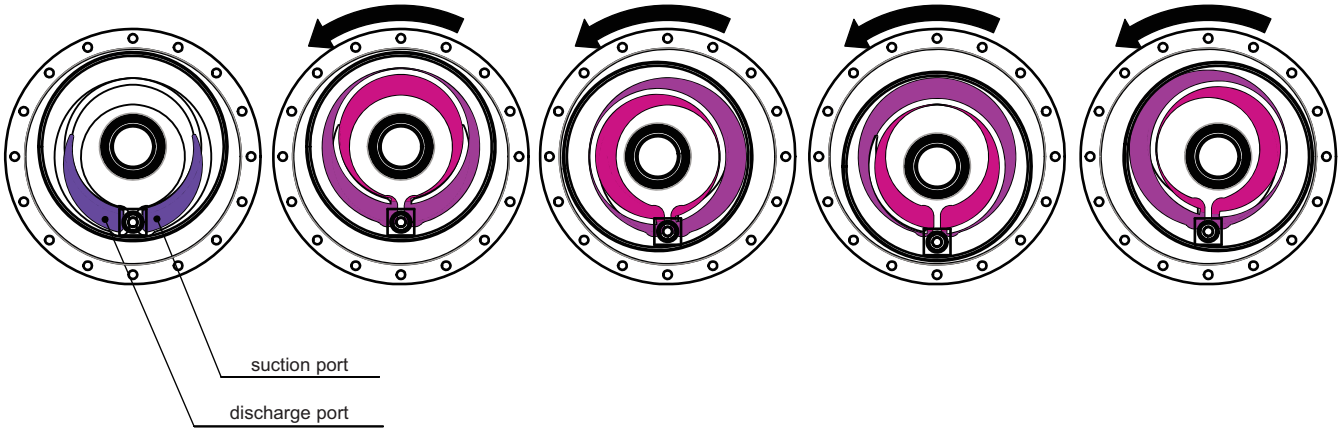

2. GENERAL SAFETY INFORMATIONS

WARNING Dangerous voltage. Can cause injury and death.	DISCONNECT THE ELECTRICITY SUPPLY BEFORE ANY MAINTENANCE OPERATION.
WARNING Dangerous voltage. Can cause injury and death.	DURING THE INSTALLATION AND MAINTENANCE PROCEDURES, ALL ELECTRICAL WORK MUST BE PERFORMED BY QUALIFIED PERSONNEL.
WARNING Hazardous or toxic fluids can cause serious injury.	IF PUMPING HAZARDOUS OR TOXIC FLUIDS, THE PUMP MUST BE PURGED, FLUSHED AND CLEANED UP PRIOR TO PERFORMING ANY SERVICE OPERATION.
WARNING The weight ot the parts can be dangerous and may provoke bodily injuries or material damages.	USE THE APPROPRIATE MEANS OF HANDLING TO THE WEIGHT OF THE PARTS.
WARNING Do not operate without guard in place.	DO NOT PERFORM STARTUP WHEN THE PUMP IS NOT COMPLETELY RISE AND ITS PROTECTIONS WERE NOT REPLACED.
WARNING Do not operate without guard in place.	STOP THE PUMP AND PREVENT RESTARTING, EVEN ACCIDENTALLY, BEFORE ANY WORK ON THE INSTALLATION.

WARNING Hazardous pressure can cause personal injury or property damage.	DO NOT MAKE GETTING STARTED IN THE ABSENCE OF PROTECTION AGAINST OVERPRESSURE.
WARNING Hazardous pressure can cause personal injury or property damage.	RELEASE PRESSURE FROM THE SYSTEM BEFORE ANY WORK ON THE INSTALLATION.
CAUTION Extreme heat can cause injury or property damage.	EXTERNAL SURFACES OF THE PUMP CAN BE AT A TEMPERATURE LIABLE TO CAUSE INJURY OR SEVERE DAMAGE.
CAUTION Slippery lubricant. Spills should be cleaned up.	CLEAN ALL PUMPED LIQUID FLOWS OR LUBRICANT THAT COULD CAUSE A FALL.
CAUTION Extreme heat can cause injury or property damage.	CONTROL THE PARTS TEMPERATURE BEFORE ANY WORK ON THE INSTALLATION.

3. INSTALLATION

3.1 Reception

MOUVEX is not responsible for any material damage resulting from transportation or unpacking.

On receipt, visually inspect the packaging to ensure it is not damaged. If necessary, indicate the appropriate reservations on the transport and send a registered letter to the carrier within 48 hours (if possible accompanied by photos).

When unpacking, check that the pump and any other materials are not damaged. If necessary, send a registered letter to the carrier within 48 hours (if possible accompanied by photos).

The pump must be supplied by the following documentation :

- Delivery note,
- Pump Instructions,
- If necessary, complementary Instructions (ex : ATEX),
- If necessary, Instructions materials provided with the pump (ex : motor, sensors…).

3.2 Installation design

3.2.1 Pump

To obtain the service expected from a MOUVEX pump, regarding both performance and longevity, it is vital that the type of pump, its speed and the materials used for its construction are determined as a function of the pump output, its installation and operating conditions.

You can contact our Technical Services at any time to ask for the information you require.

3.2.2 Piping

Not recommended

To be avoided if possible

Recommended

Suction pipe length

Length should be as short as possible.

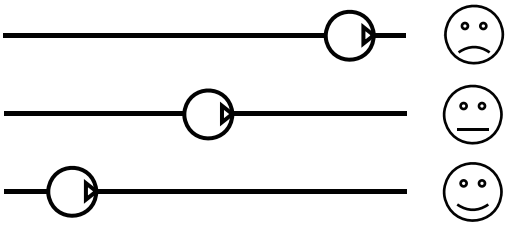

Suction pipe diameter

Diameter must be at least equal to pump port diameter and even more if required by pumping conditions.

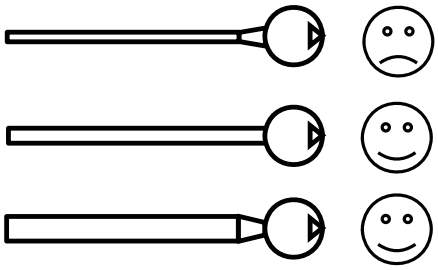

Suction pipe configuration

Check tightness to avoid accidental air intake.

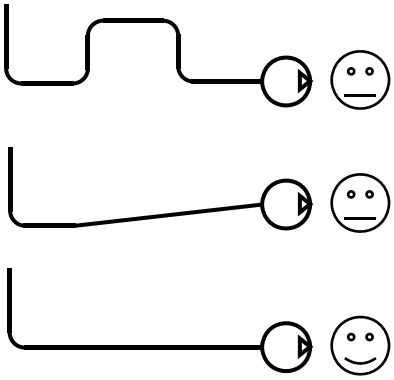

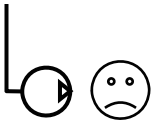

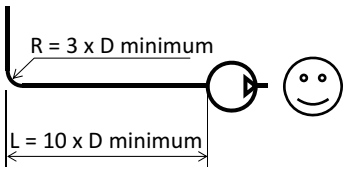

Pipe alignment and supporting

Pump must not support piping nor endure stress resulting from piping weight or dilatation effects. For latters, expansion loops should be included.

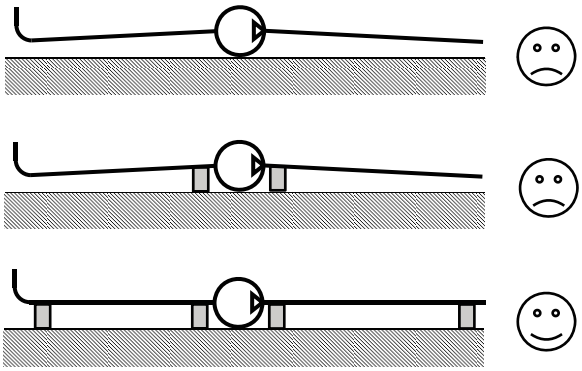

Pipe equipment

- Place valves close to the pump to avoid draining pipe during maintenance operations. Preferably select full bore ball or butterfly valves.

  Pressure connections on pump suction and discharge are recommended for settings and controls.

  Protect pump by using a MOUVEX prefilter on suction. Make sure piping, vessels valves and other installation devices are carefully cleaned before mounting.

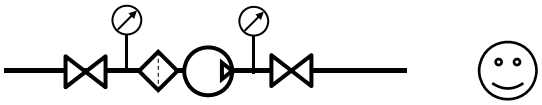

- MOUVEX pumps are self priming. However, if line emptying should be avoided and/or if suction lift is high, a foot valve can be added.

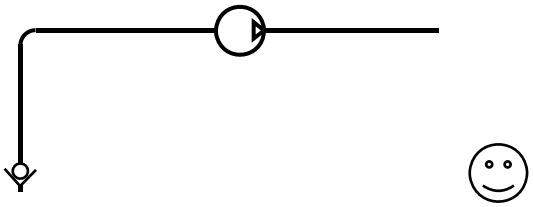

- If pumped liquid presents a risk of in pipe solidification and potential dilatation, low points on the pipe should be avoided or equipped with drain valve.

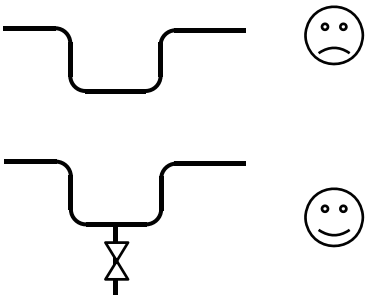

- If installation is heated, it must be designed so that fluid dilatation can evacuate through piping. Therefore fluid contained in piping must be heated before fluid contained in the pump. Also check that a heated pump is not isolated by closed valves.

For hoses fitting on pump suction or discharge, a hose whip restrain device must be installed to limit the whip or travel of the pressurized hose at start up, or in case the hose breaks free.

WARNING: SEVERE PERSONAL INJURY OR PROPERTY DAMAGE CAN CAUSE FROM WHIPPING HOSES.

3.3 Installation and pump protection

WARNING

Do not startup the pump if there is no protection against overpressure.

The pump must be protected against excess pressure. It can be delivered with a internal relief valve or a pressure switch to carry out this function.

If pump is used in both directions, the pump must be protected in both directions of operation.

3.3.1 Protection by integrated relief valve

NOTICE

Pump internal relief valve cannot be used to protect the installation.

3.3.1.1 Internal relief valve operation

The compensated internal relief valve operates like a valve, by automatically limiting the discharge pressure at the value for which it is adjusted.

When the discharge pressure reaches the adjusted pressure of the spring, the valve opens, thus permitting the partial or total return of the liquid to the inlet side of the pump.

When the discharge is closed, the compensated internal relief valve is designed to generate a very small increase of pressure, relative to the setting pressure, which means that the motor will economically supply the necessary additional power for specific working conditions.

It should be noted that the role of the internal relief valve is limited to protecting the pump against accidental overpressure.

It is vital to provide an appropriate overload protection for the drive, unless the model used can handle the increased load due to maximum overpressure (pump sending its flow through the internal relief valve with the spring tightened to the maximum).

The double internal relief valve assembly consists of two single internal relief valves in opposition. This protects the pump in both directions of rotation without the need for mechanical intervention. Operation on each direction is identical as above. The setting of this internal relief valve must be performed for both directions of operation.

3.3.1.2 Internal relief valve orientation

Contrary to double internal relief valve designed for protect the pump in the two directions of rotation, the single internal relief valve only protects the pump in one direction of operation. It is therefore imperative to check for proper orientation before the first start of the installation or after any modification in the pumping circuit or intervention on the drive, by verifying that the cap 44827 is located on the inlet side and reverse the mounting direction of the internal relief valve if necessary.

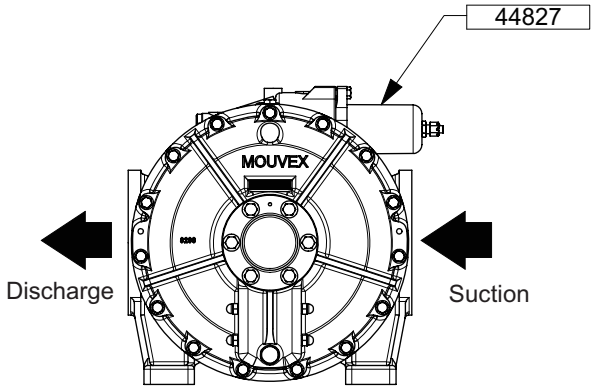

This control is not necessary in the case of a double internal relief valve, protecting the pump in both directions of operation.

To modify the mounting direction of the internal relief valve, see § RELIEF VALVE.

3.4 Hoisting devices

Use a lifting ring (M20), fixed to the upper part of the pump, to raise it.

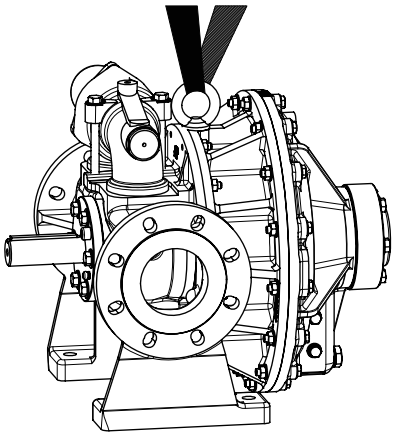

NOTICE

Do not use the lifting ring to lift the complete pump unit.

Pump weight : see § TECHNICAL CHARACTERISTICS.

3.5 Unit assembly

3.5.1 Anchoring the pump units

The correct seating of the pump is vital for its efficient operation and its longevity.

The surface must be resistant enough to absorb the stresses due to the pump unit without deformation.

In the case where the unit is fastened by anchor lugs or bolts, it must be carefully wedged to prevent any deformation of the chassis when tightening the bolts. Deformation of the chassis will cause stress prejudicial to the pump and the drive device and put the coupling out of true, thereby causing vibrations, noise and premature wear. Care must be taken so that the chassis is clear of the ground, apart from the base plates.

The chassis is equipped with a ground connection that must be used.

We recommend leaving an unoccupied space of about 50 cm, on either end of the chassis, to permit access to the bolts fastening the pump, reduction gear and motor together.

3.5.2 Coupling selection

NOTICE

Over 5 bar, the pump must be mounted with a double coupling type.

3.5.3 Alignment of motor / pump and reduction gearbox / pump shafts

WARNING

Do not start the pump as long as it is not secured and its protections not in place.

It is important to control the alignment of motor / pump and reduction gearbox / pump shafts at every step of installation in order to ensure that none of these steps generates stress on the pump unit or the pump itself :

- after fastening on foundations,
- after fastening the piping,
- after the pump has operated at normal operating temperature.

The 3 figures below show the operation clearly.

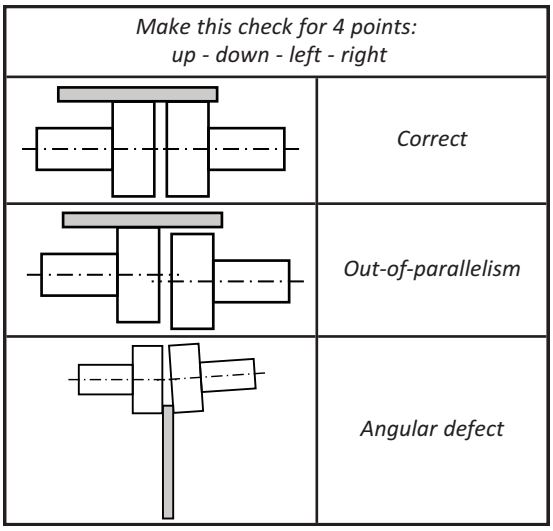

Refer to manufacturer's instructions to determine the acceptable values.

NOTICE

Do not rely on the flexible coupling to compensate for misalignment.

3.5.4 Motorization

The drive choice must be made in order to comply with the conditions of the pump (speed, absorbed power).

The direction of rotation of the pump unit must be checked before the first startup and after any work on the gear motor that may have affect its rotation direction. To do this, follow the instructions in § Commissioning - Direction of rotation .

3.5.4.1 Electric motors

Refer to manufacturer's instructions for the motor installation.

A particular attention should be given to the following instructions :

- check that the supply voltage matches the indications on the motor rating plate,
- comply with the wiring diagram, make sure the wires are rated for the power and take care with the contacts which must be thoroughly tightened,
- the motor must be protected by appropriate circuit breakers and fuses,
- connect the regulatory ground connections.

3.5.4.2 Diesel engine drive

Refer to manufacturer's instructions for the motor installation.

4. USE

4.1 Noise level

The sound level of a pump is greatly influenced by its conditions of use. Cavitation and pumping products with high gas contents generally increases the sound level.

Under the following pumping conditions :

- excluding cavitation
- suction pressure ..... 0 barg
- differential pressure ..... 10 bar
- speed of rotation..... 350 rpm

The sound level reached for a A55A pump in good conditions without the drive is less than 80 dB(A).

With no particular installation design being retained, sound level has been measured at 1 m from pump surface and 1.6 m. above ground. Maximum value measured from discharge port was 79 dB(A).

4.2 Commissioning

4.2.1 Cleaning

The pumps are delivered well greased, it may be necessary to clean them before putting them in use.

The cleaning can be done either by circulating an appropriate liquid, or by removing the pump front cover and carefully cleaning the internal parts (see § Opening of the pump).

4.2.2 Direction of rotation

The MOUVEX pump is reversible; this allows it to always circulate the liquid in the desired direction by choosing the corresponding direction of rotation. However, to obtain best performances of the pump, following rule is to be applied depending on pumped product :

a) Pumping of fluids remaining liquid even if temperature rises (no change of form such as solidification, polymerization, crystallization, excessive viscosity increase...).

End cover must be in relation with discharge side. This is controllable externally by checking position of screw 12706A which must be on discharge side.

Unless an opposite mention on order, pumps will systematically be delivered in this configuration.

This configuration corresponds to a huge majority of applications and especially offers the best priming performances.

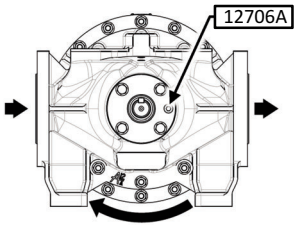

b) Pumping of products that may possibly show a change of state if temperature rises of more than 20°C/68°F compared to inlet temperature : solidification, polymerization, crystallization, excessive viscosity increase.

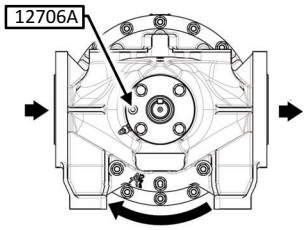

Screw 12706A must then be located on suction side. This position ensures a better fluid internal circulation avoiding a possible temperature rise. It however decreases self-priming ability and may lead to a flow rate reduction, especially on low viscosity fluids. **Consult us for any question regarding this configuration.**

To reverse the main rotation direction of the pump, see § Reverse of main rotation direction .

For applications requiring the two directions of rotation provide the same hydraulic performance, contact our Technical Services.

The suction and discharge sides are defined as follows : when an observer faces the shaft, if rotation takes place clockwise, the intake is on the left; on the contrary if the rotation is anticlockwise, the intake is on the right.

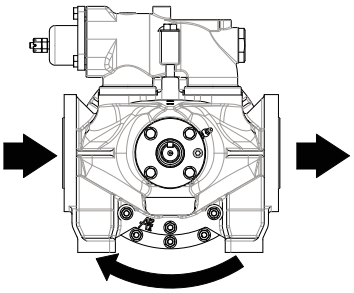

The reverse of the direction of rotation should be done after a full stop of the pump.

Controlling the direction of rotation of the motor :

This control must be done without pump product and suction and discharge circuits vented to avoid generating unexpected pressure (at suction for example).

Start the pump unloaded to control the connections are good and check the direction of rotation corresponds to the direction of inlet and outlet installation.

4.2.3 Starting-up

Before starting-up, make sure that the pumping conditions are met. The circuit must be in one of its pumping configurations with corresponding valves open and especially the inlet valve.

NOTICE

With a product requiring heating, the product must be brought to its pumping temperature before starting up the pump.

See also the recommendations in § Installation design - Piping.

4.2.4 Surface temperature

Depending on the operating conditions (temperature of the pumped liquid, differential pressure ...), the use of the pump can generate high surface temperatures.

CAUTION

When these temperatures exceed 80°C, protective measures must be implemented, like :

- reduction of contact with heated surfaces ;
- warning to operators.

These measures must be taken from 68°C in case of reduced space around pump, possibly leading to a longer contact with pump surface.

4.3 Operation without any pumped product

Pumps using the MOUVEX principle can be run dry, without any pumped product in the pump (for example during the priming) for a period of six minutes, without causing damage.

Additional restrictions may apply to certain applications. If necessary, refer to additional instructions supplied with the pump (ex : ATEX additional instructions, specific instructions for mechanical seals…).

4.4 Shutting down the pump

When shutting down the pump, we recommend waiting for the pump to stop completely before closing the valves, especially the inlet valve.

If the pump circuit is to be located between valves and/or a non-return valve, you need to take account of the variations in temperature that can lead to contraction of the liquid in the circuit. In this case, you need to provide some means of compensating for the contraction (see § Installation design - Piping for examples of possible measures). The opening pressure for this valve should be compatible with the permitted pressure for the other components in the circuit.

In the case of liquids containing particles settling on shut-down, it is necessary to make sure the consistency of the deposit will not impede restarting the pump.

5. OPENING OF THE PUMP

5.1 Preparation

5.1.1 Necessary tools

	Reverse of main rotation direction	Cylinder - piston	Bushings	Mechanical seal	Bearing	Piston bearing	Slide block	Slide block shaft	Slide block pads	Piston rear seat	Shaft	Internal relief valve	Stirrup
16 mm open end and socket wrenches		x	x	x	x	x	x	x	x	x	x	x	
17 mm open end and socket wrenches		x	x	x	x	x	x	x	x	x	x	x	
18 mm open end and socket wrenches	x		x	x	x	x					x	x	
21 mm open end and socket wrenches	x											x	
27 mm open end and socket wrenches	x	x	x	x	x	x	x	x	x	x	x	x	x
30 mm open end and socket wrenches							x	x					
Adjustable open end wrench 44 mm												x	
Allen wrench size 2,5				x									
Allen wrench size 10	x			x	x	x					x		x
Allen wrench size 17 (pump with jacket only)									x				
Stud remover M10		x							x				
Stud remover M20								x					
Flat screwdriver						x							
Pliers	x			x	x	x					x		
Mallet		x											
Hammer		x	x	x	x	x	x	x			x	x	
Pin punch Ø3 mm												x	
Pin punch Ø4 mm				x		x							
Pin punch Ø8 mm		x	x	x	x	x	x	x			x		
Block (see § CYLINDER-PISTON)		x	x	x	x	x	x	x			x		
Bar (see § CYLINDER-PISTON)		x											
Shim (see § CYLINDER-PISTON)		x											
Cylinder outer diameter 72 min - 78 max (for dismantling)			x										
Tube inner diameter 72 min - 78 max (for assembling)			x										
Bearing puller (bore Ø60 mm depth 90 mm)			x										
Tube inner diameter 60 min - 66 max (for assembling)			x										
Cylinder outer diameter 42 min - 47 max (for dismantling)					x								
Tube inner diameter 55 min - outer diameter 80 min 88 max (for assembling)					x								
Press			x	x	x								
Medium thread lock type Loctite® 243* or equivalent	x	x	x	x	x	x	x	x	x	x	x	x	x
Thread sealant product - medium strength type Loctite® 577* or equivalent.									x				
Tightness product for flat surfaces: application on solvents: GEB oil® or equivalent other applications: Loctite® 574* or equivalent		x											
Fixing product type Loctite® 640* or equivalent								x					
Flat file								x					
Sand paper (n°320)								x					
Bearing grease (see § MAINTENANCE)	x			x	x						x		
Drill Ø4,0							x	x					
Chisel			x										

For setting or control operation	
For spare parts replacement operation	

* Loctite® is a registered trademark.

5.1.2 Assembly torques

M4	5	±2 N.m
M6	5	±2 N.m
M7 x 100	5	±2 N.m
M10 (studs)	35	±8 N.m
M12	35	±8 N.m
M10 (others)	20	±10 N.m
M20	10	±6 N.m
G3/8	3,5	±1 N.m
G1 conical	6	±2 N.m

5.1.3 Pump preparation

WARNING

Before any intervention on the pump :

If pumping hazardous or toxic fluids, the pump must be purged, flushed and cleaned up prior to performing any service operation.

Stop the pump and prevent restarting, even accidentally, before any work on the installation.

Disconnect the installation.

Relieve the system pressure.

Control the parts temperature.

Drain the pump.

Make sure the isolation valves, if any, are closed before pulling out the drain plug 12434 and its seal 12412.

Remove the seal 12412 and check its condition. Replace it if necessary.

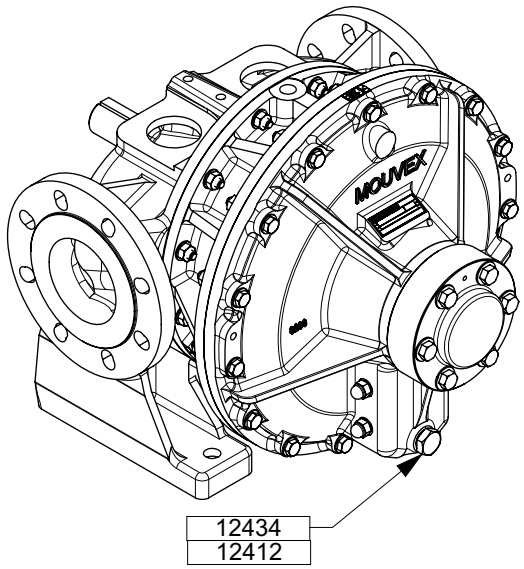

Once the pump is drained, fit the plug 12434 and its seal 12412.

5.2 Reverse of main rotation direction

5.2.1 Dismantling

Disconnect the pump from the engine and remove the coupling.

- Coupling supplied by MOUVEX

  Remove the locking screw, then remove the coupling and check its condition. Replace it if necessary.

- Other coupling

  Refer to manufacturer's instructions.

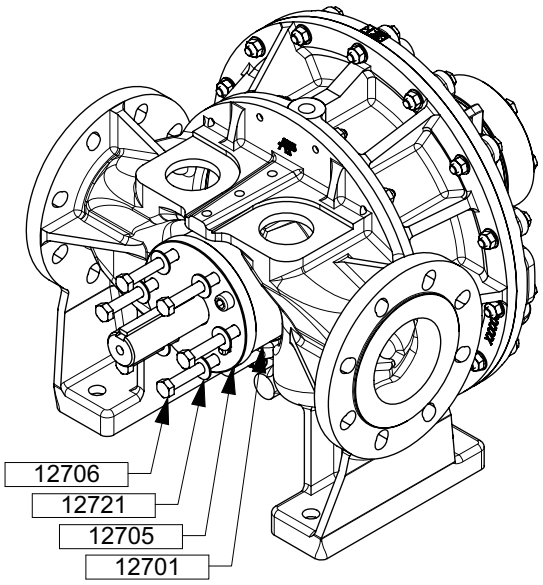

Remove the screws 12706 and theirs washers 12721.

Without remove the parts from the main body, rotate bearing cover 12705 – bearing cage 12701 subassembly to obtain the desired position (drain holes must remain in vertical position ; do not confuse with pin hole).

Fit the screws 12706 and theirs new ridged conic washers 12721 with medium thread lock.

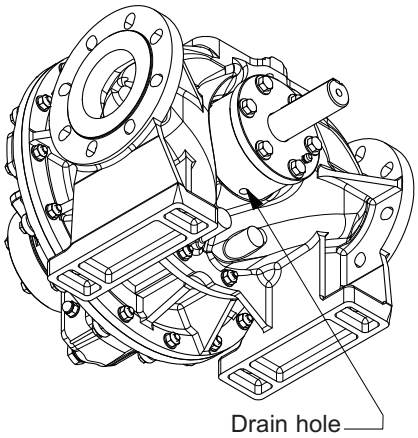

If bearing cage 12701 remain stucked to the main body 12101, apply the following procedure :

- Remove the key 12508.
- Remove the screw 12706A.
- Remove the bearing cover 12705 taking care not to damage the lip seal 12707 on the key housing edges.

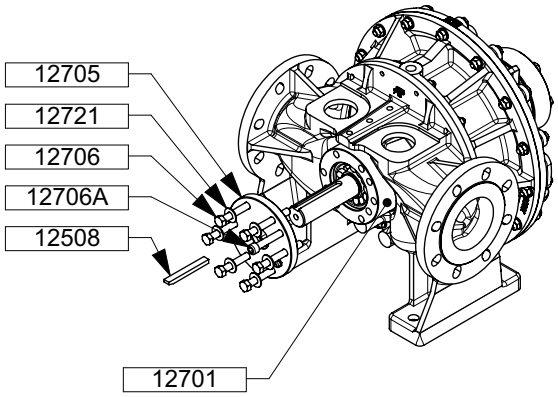

- Position two screws 12706 into the threaded holes of the bearing cage 12701. Keep tightening screws 12706, with balanced tightening between the two screws until parts separate.
- If necessary, clean the bearing 12703 and fill it with grease.
- Refit the bearing cover with its screw 12706A.
- Refit the key 12508.

Positions detail

a) Pumping of fluids remaining liquid even if temperature rises (no change of form such as solidification, polymerization, crystallization, excessive viscosity increase...).

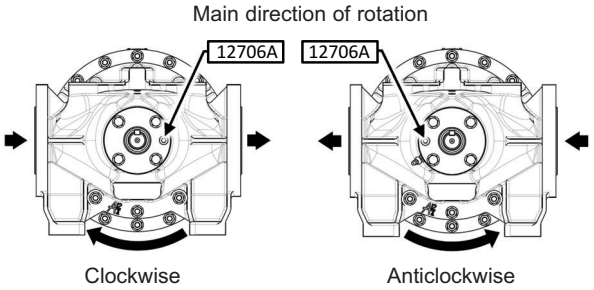

b) Pumping of products that may possibly show a change of state if temperature rises of more than 20°C/68°F compared to inlet temperature : solidification, polymerization, crystallization, excessive viscosity increase.

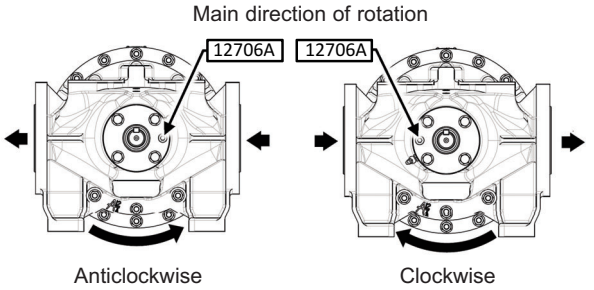

5.2.2 Pump with single relief valve

Reverse internal relief valve position as follow.

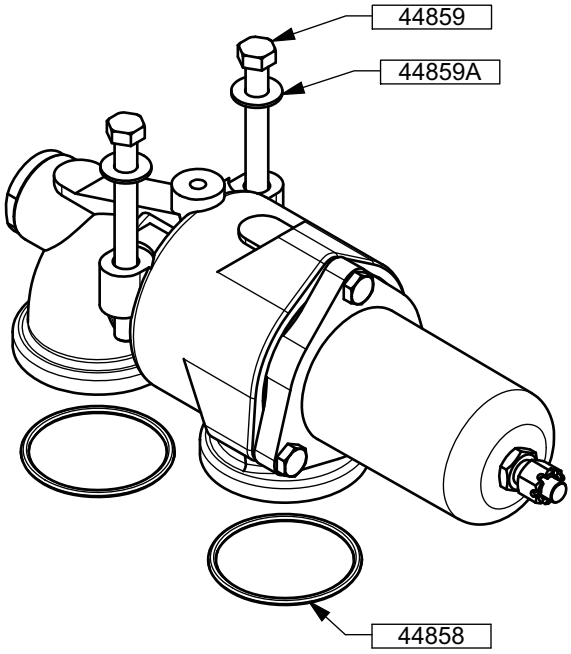

Remove the screws 44859 and theirs washers 44859A.

Remove the seals 44858 and check their condition.

Replace them if necessary.

Position the seals 44858 in their grooves.

Turn the internal relief valve through 180° (the internal relief valve cap 44827 must be oriented suction side).

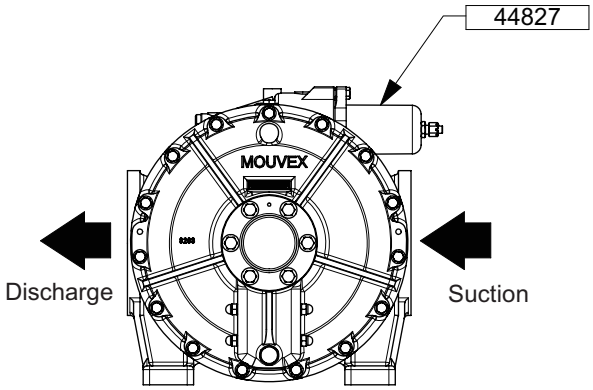

Take care not to pinch the seal 44858 during the assembly.

Fit the screws 44859 with theirs new ridged conic washers 44859A. Tighten the screws making sure tightening is balanced between the two screws.

5.2.3 Pump with double relief valve

Check that pressure settings correspond to requirements for each direction of rotation.

If necessary, proceed to settings (see § Relief valve - Opening pressure setting).

5.3 Cylinder - piston

5.3.1 Dismantling

Dismantling of front cover

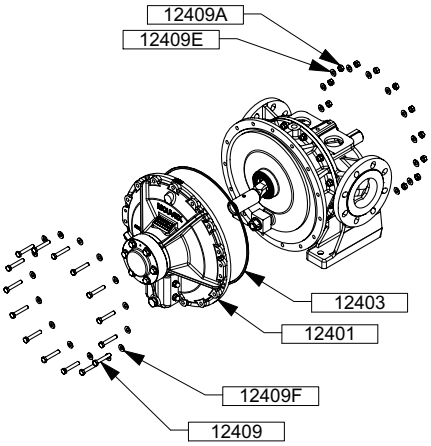

Remove the front cover bolts (screw 12409, nuts 12409A and washers 12409E - 12409F).

Remove the front cover set (12401-12403-12414-12415-12416-12417-12420-12310-12311) by progressively separating it from the pump body. If necessary, use the threaded holes on the front cover by screwing progressively two screws 12409.

Remove the seal 12403 and check its condition. Replace it if necessary.

Check the front cover bushing 12415 condition. Replace it if necessary.

Dismantling of piston

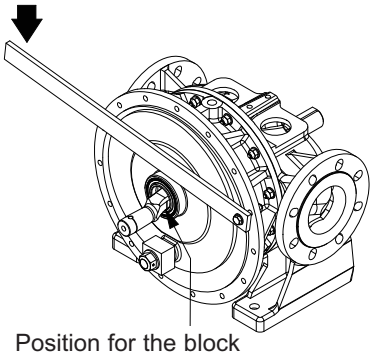

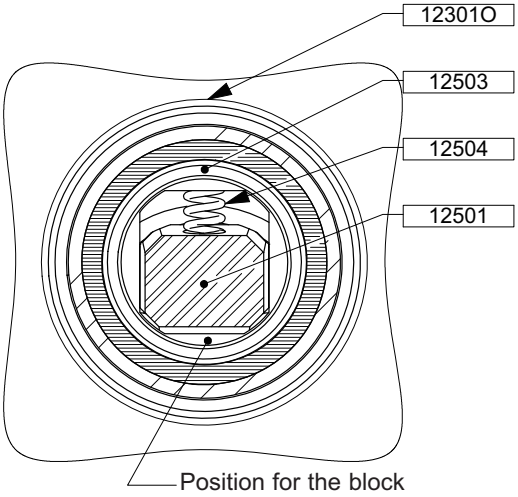

Remove the pin 12524.

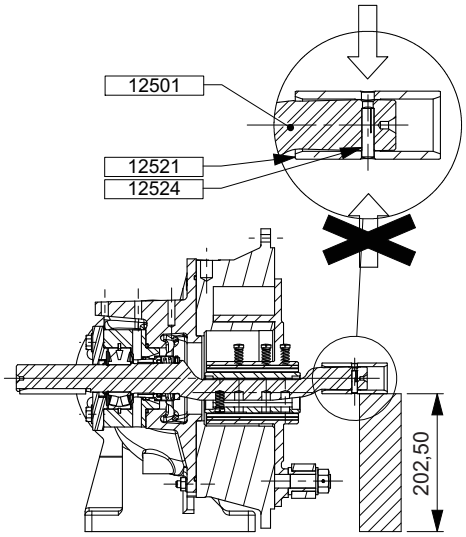

NOTICE

To avoid damaging mechanical seal during this operation, shaft must be supported by a block (select a non-hard material to avoid damaging the sleeve).

Remove the sleeve 12521.

Rotate the shaft 12501 to place piston bearing 12503 in top position.

Compress the piston springs 12504 by using a long bar as a lever.

Put a shim between shaft 12501 and piston bearing 12503 to keep the springs 12504 compressed.

CAUTION

Do not put fingers between shaft 12501 and piston bearing 12503.
Secure the pump on the ground before using the bar.

Pull away the piston 12301O by softly pulling on slide block 12312. If necessary, use a screwdriver as a lever to pull it away from cylinder 12201 (be careful not to damage friction faces).

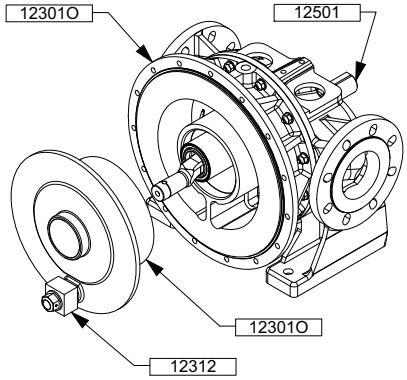

Remove the piston 12301O.

Remove the shim with the bar.

Check piston 12301O condition. Replace it if necessary.

Check piston bushing 12303 condition. Replace it if necessary.

Dismantling of cylinder

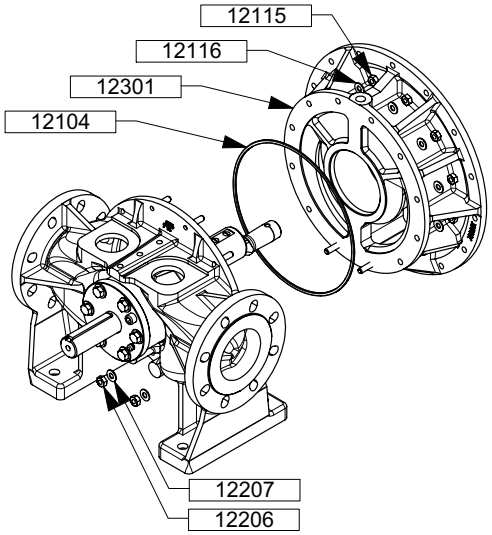

Remove the screws 12106, the nuts 12115 and theirs washers 12207-12116.

Separate the cylinder 12201 from the main body 12101 with a mallet and remove the seal 12104 and check its condition. Replace it if necessary.

Check the cylinder 12201 condition. Replace it if necessary.

CAUTION

Proper pumping characteristics require a piston and cylinder couple with paired dimensions. Therefore replacement of piston or cylinder requires replacement of the piston/cylinder couple.

5.3.2 Reassembly

Assembly of cylinder

Clean the housing of seal 12104.

Fit the seal 12104 in the main body 12101.

Apply a sealing product between the main body 12101 faces and the cylinder 12201 (see § PREPARATION).

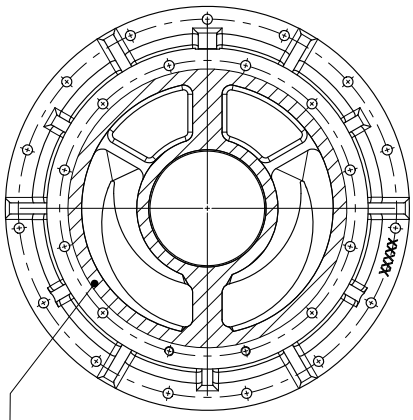

Sealing product application zone

Fit the screws 12106, the nuts 12215 with theirs new ridged conic washers 12207 and 12116.

Take care not to pinch the seal 12104 during the assembly.

Assembly of piston

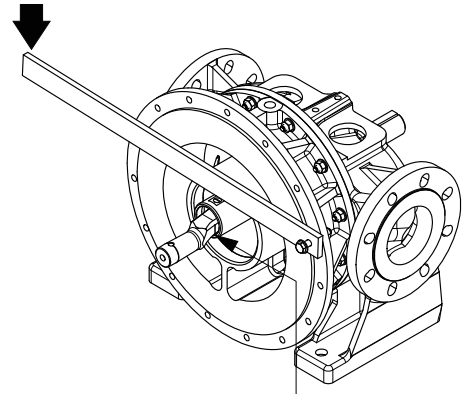

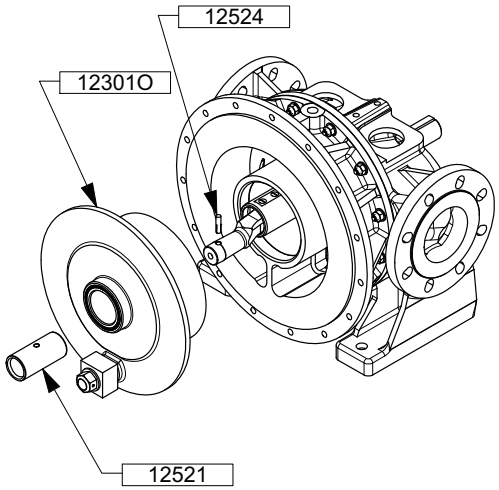

Lubricate the friction surfaces of the piston 12301O with a product compatible with the pumped liquid.

Rotate the shaft 12501 to place piston bearing 12503 in top position.

Compress the piston springs 12504 by using a long bar as a lever.

Put a shim between shaft 12501 and piston bearing 12503 to keep the springs 12504 compressed.

CAUTION

Do not put fingers between shaft 12501 and piston bearing 12503.

Secure the pump on the ground before using the bar.

Fit the piston 12301O on its piston bearing 12503.

Remove the shim with the bar.

Fit the sleeve 12521 on the shaft 12501.

Fit the pin 12524 (until it cannot move any forward) taking care not to damage the sleeve.

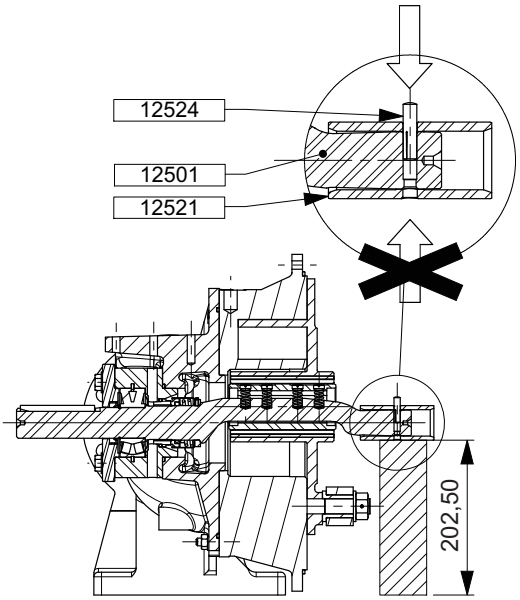

NOTICE

To avoid damaging mechanical seal during this operation, shaft must be supported by a block (select a non-hard material to avoid damaging the sleeve).

Assembly of front cover

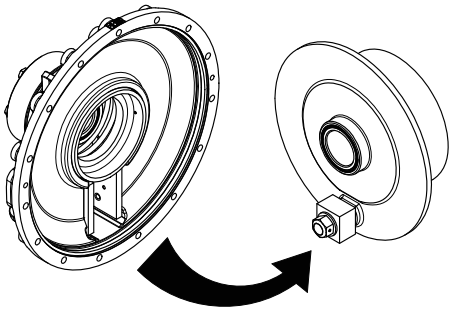

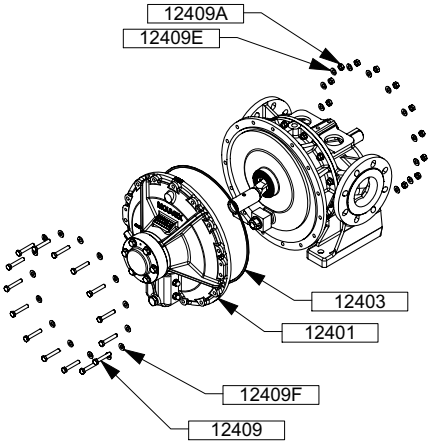

Clean the housing of seal 12403.

Fit the seal 12403 on the cylinder 12201.

Orientate the slide block 12312 to make it pass between the pads 12404.

Fit the front cover 12401 on the cylinder 12403.

Take care not to pinch the seal 12403 during the assembly.

Take care not to damage the bushing 12415 during the assembly.

Fit the screws 12409 and nuts 12409A with theirs new ridged conic washers 12409E and 12409F.

5.4 Bushings

5.4.1 Dismantling

Follow the instructions in § CYLINDER - PISTON.

Piston bushing

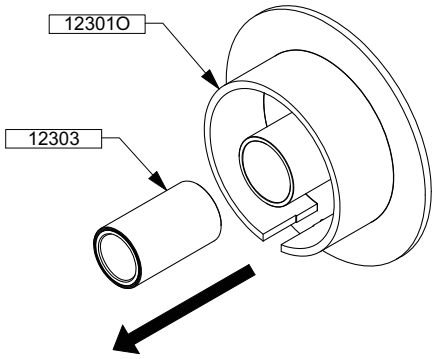

Remove the bushing 12303 of the piston 12301O with a press and a cylinder.

NOTICE

To avoid deforming the piston, apply the force on the housing face of the bushing.

Remove preferably the bushing in the direction shown on the view.

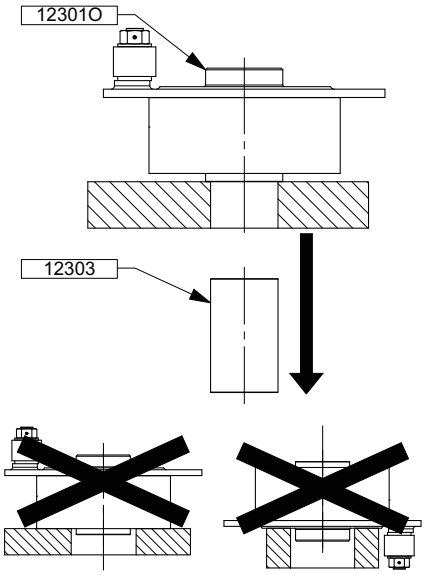

Front cover bushing

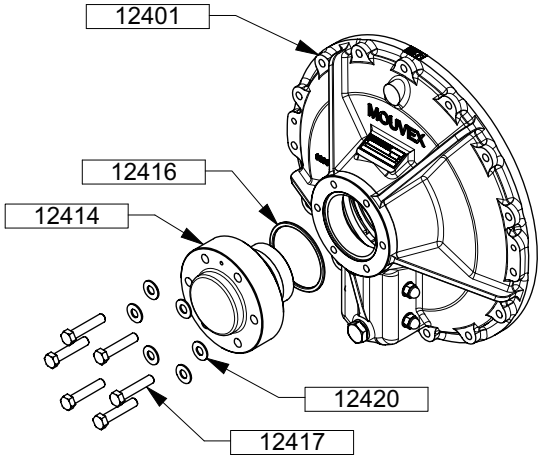

Remove the screws 12417 and theirs washers 12420.

Remove the set front cover bearing - bushing (references 12414 - 12415 - 12416) from the front cover 12401.

Remove the seal 12416 and check its condition. Replace it if necessary.

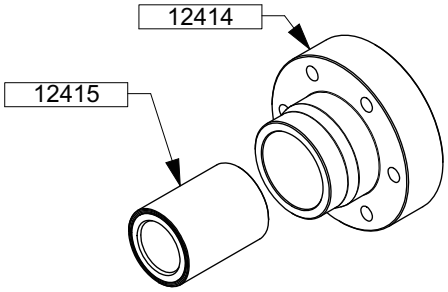

Carbon bushing : Destroy the carbon part of the bushing 12415 with a mallet and a chisel taking care not to damage the front cover bearing 12414. Remove the metallic part of the bushing 12415 with a puller.

Bronze bushing : Replacing the bronze bushing requires the purchase of a complete front cover bearing 12413.

5.4.2 Reassembly

Piston bushing

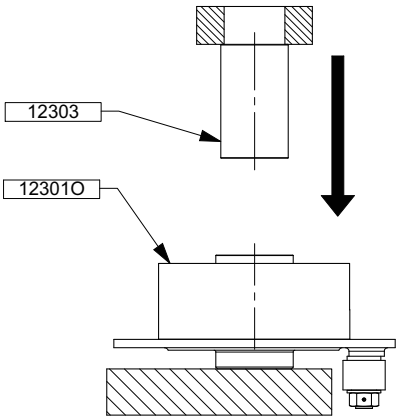

Insert the bushing 12303 in the piston 12301O with a press and a cylinder until the faces of the bushing and the piston are aligned (on both sides).

NOTICE

To avoid deforming the piston, apply the force on the housing face of the bushing.

Thoroughly clean the parts before assembly.

Insert preferably the bushing in the direction shown on the view.

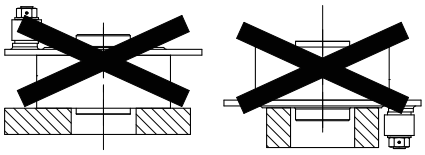

Do not add glue or grease.

Carbon bushing only : Effort must be made only on metal liner and not on the carbon.

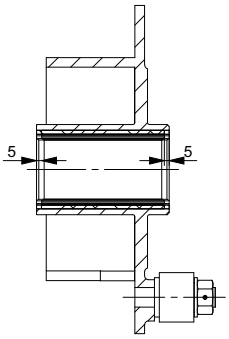

Front cover bushing

Carbon bushing only :

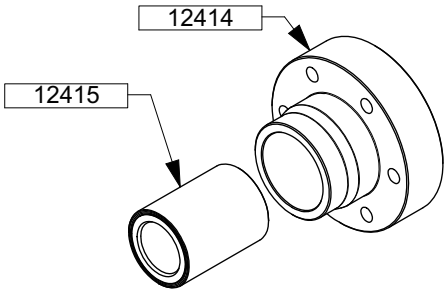

Orientate bushing chamfer on the outer side (see scheme above).

Insert the bushing 12415 in the front cover bearing 12414 using a press and a cylinder until bushing 12415 and front cover bearing 12414 faces are aligned.

NOTICES

Do not add glue or grease.

Effort must be made only on metal liner and not on the carbon.

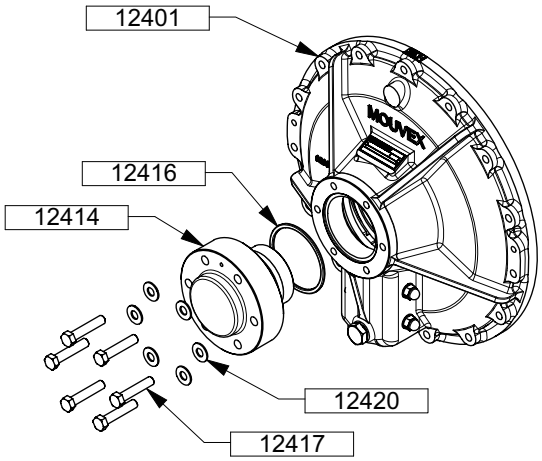

Clean the housing of the O-ring 12416.

Fit the O-ring 12416 on the front cover bearing 12414.

Fit the screws 12417 and theirs new ridged conic washers 12420 with medium thread lock.

Follow the instructions in § CYLINDER-PISTON to finish the reassembly.

5.5 Mechanical seal

5.5.1 Type

The A55A pumps can be equipped with :

- standardized mechanical seals Ø 45 (short types standardized mechanical seals - K - according to EN 12756),
- MOUVEX mechanical seals Ø 45.

5.5.2 Operation

The shaft drive the one piece rotating part in a rotary motion.

The stationary seal face is fixed on the pump body.

Sealing is done :

- Static, by the O-rings located between the rotating part and the shaft and between the stationary seal face and the pump body.
- Dynamic, by the contact surfaces between the rotating part and the stationary seal face.

Sealing is therefore done as a function of the condition of these contact surfaces and the seals.

5.5.3 Dismantling

Preparation

Disconnect the pump from drive and remove the coupling and the key 12508.

- Coupling supplied by MOUVEX

  Remove the locking screw, remove the coupling and check its condition. Replace it if necessary.
- Other coupling
  Refer to manufacturer's instructions.

Follow the instructions in § CYLINDER - PISTON.

Dismantling of bearing cover

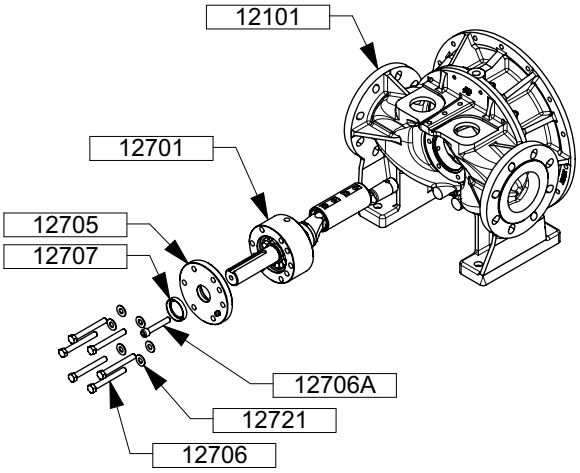

Note the position of the screw 12706A (right or left).

Remove the screws 12706 and theirs washers 12721.

Remove from the main body 12101 the set shaft - bearing cover - bearing cage - seal - bearing - mechanical seal - piston bearing (references 12501 - 12503 - 12504 - 12511 - 12600 - 12627 - (12641 - 12642) - 12701 - 12703 - 12704 - 12705 - 12706A - 12707 - 12708 - 12717 - 12733).

Remove the screw 12706A.

Remove the bearing cover 12705, taking care not to damage the lip seal 12707 on the key housing edges.

Check the lip seal 12707 condition. Replace it if necessary.

If bearing cage 12701 would remain stucked on main body 12101, follow the following procedure :

- Note the position of the screw 12706A (right or left).
- Remove the screw 12706A.
- Remove the bearing cover 12705 taking care not to damage the lip seal 12707 on the key housing edges.
- Position two screws 12706 in the bearing cage 12701 threaded holes. Keep tightening the screws 12706, with balanced tightening between the two screws until parts separate.

NOTICES

Once bearing cover 12705 is removed, shaft is hold only by the bearing and may fall which could damage the mechanical seal. To prevent this, keep holding shaft 12501 and bearing cage 12701 to limit ball joint movement, for instance by putting it vertically.

Once bearing cover 12705 is removed, the bearing is no longer protected against impurities. To prevent any pollution of bearing grease, cover bearing with a protection sheet.

Dismantling of the bearing cage

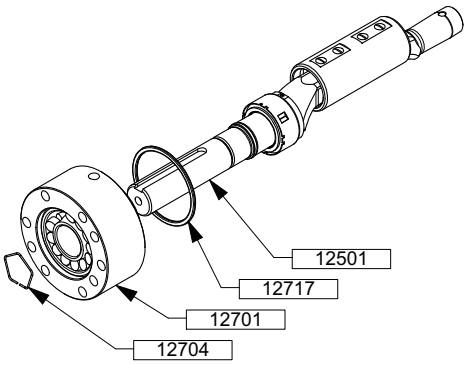

Remove the seal 12717 and check its condition. Replace it if necessary.

Remove the ring 12704.

Remove the shaft 12501 from the set bearing cage - bearing (references 12701 - 12703 - 12733 - 12627 and stationary seal face mechanical seal), taking care not to damage the Nilos seal 12733.

Dismantling of MOUVEX mechanical seal

NOTICE

Mechanical seal components must never be put on friction faces without protection sheets.

- Dismantling of the mechanical seal rotating part

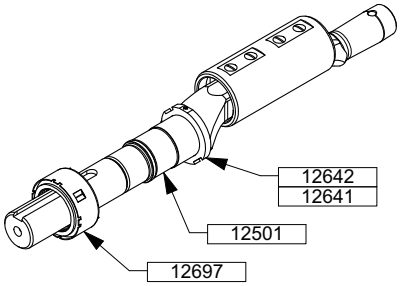

Remove the rotating part 12697 (the mechanical seal driver 12641 and its screws 12642) from shaft 12501 taking care not to scratch it.

If necessary, clean friction face with a clean, soft cloth. Caution not to scratch friction face.

- Dismantling of the mechanical seal stationary seal face

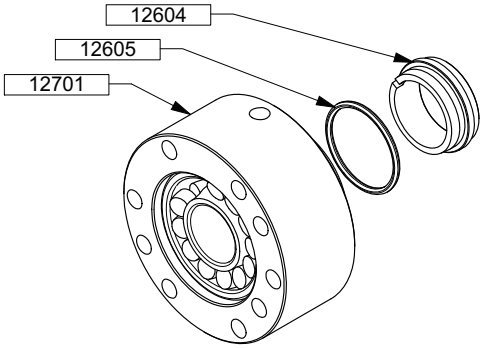

Remove the stationary seal face 12604 and its seal 12605.

If necessary, clean friction face with a clean, soft cloth. Caution not to scratch friction face.

Dismantling of mechanical seal (other)

Refer to manufacturer's instructions.

5.5.4 Reassembly

Reassembly of MOUVEX mechanical seal

NOTICE

Mechanical seal components must never be put on friction faces without protection sheets.

- Assembly of mechanical seal stationary seal face

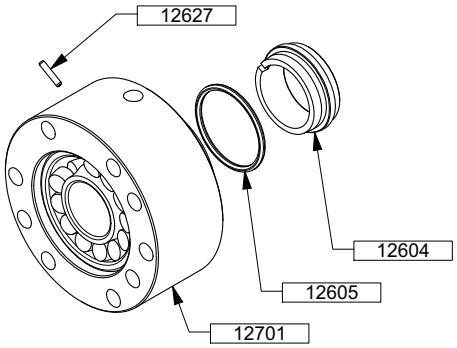

If necessary, clean the bearing 12703 of its grease.

Clean the housing of seal in the bearing cage 12701.

Fit the seal 12605 in the bearing cage 12701.

Fit the stationary seal face 12604 in the bearing cage 12701, taking care of aligning pin 12627 located in the bearing cage 12701 with groove on the stationary seal face 12604.

If necessary, clean friction face with a clean, soft cloth. Caution not to scratch friction face.

Preparation of the bearing cage

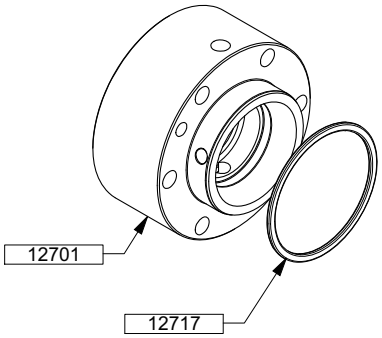

If necessary, fill the bearing 12703 with grease (see § MAINTENANCE - GREASING).

Clean the housing of seal 12717.

Fit the seal 12717 in the bearing cage 12701.

- Assembly of mechanical seal rotating part

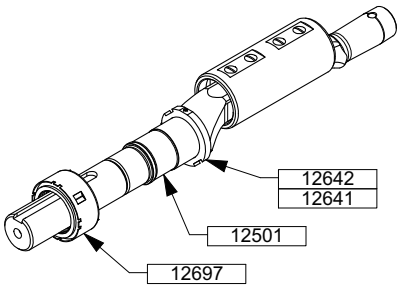

Check shaft 12501 surface condition. Rub it down with thin sand paper if there are scratches on seal rotating part O-ring place. In particular, it must be check that there are no scratches parallel to shaft axis.

If necessary, fit the mechanical seal driver 12641 on the shaft 12501 and position it so that it cannot move any forward. Do not fit the screws 12642 before completing the assembly.

To reduce friction, wet with water or alcohol surfaces on which O-rings will slip during assembly.

If seal includes FEP coated FKM O-rings, use mounting cone supplied with mechanical seal.

Engage the rotating part 12697 on the shaft 12501 passing it over bearing stopping shoulder (indicated by an arrow in the view).

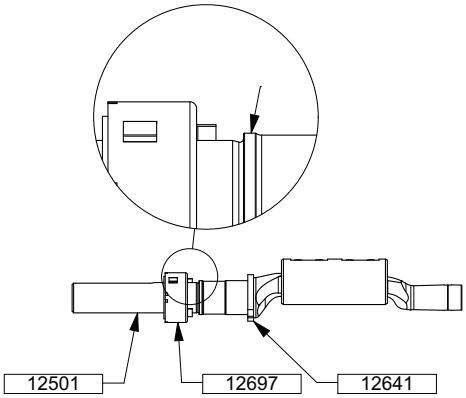

If necessary, clean friction face with a clean, soft cloth. Caution not to scratch friction face.

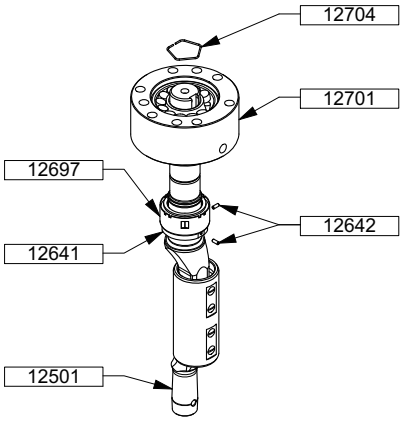

Keep holding shaft 12501 vertically.

Move driver 12641 to engage ergots of the rotating part 12697 in driver 12641 grooves (if necessary, remove the screws 12642).

Use the set bearing cage (12701 - 12703 - 12733 - 12627 - 12717 and the the mechanical seal stationary seal face) to press the rotating part 12697 with the stationary seal face 12604.

Bring the parts into position.

Fit the ring 12704.

Fit the screws 12642 of driver 12641 with thread lock.

NOTICE

Do not drop the set bearing cage 12701 on the rotating part 12697.

Check the cleanliness of the friction faces before assembly.

If necessary, clean them with a clean and soft cloth. Caution not to scratch them.

As long as bearing cover 12705 is not mounted, shaft is hold only by the bearing and may fall which could damage the mechanical seal. To prevent this, keep holding shaft 12501 and bearing cage 12701 to limit ball joint movement, for instance by putting it vertically.

Reassembly of mechanical seal (other)

Refer to manufacturer's instructions.

For the mechanical seal rotating part assembly, do the assembly in the same way as detailed for MOUVEX mechanical seal.

Finalize the bearing cage assembly on the shaft by mounting ring 12704.

Fit the mechanical seal rotating part on the shaft 12501 and position it so that it cannot move any forward.

NOTICE

If seal presents a large inlet chamfer, position seal manually so that its end correspond to the stop.

Fit the ring 12704 on the shaft 12501.

Assembly of bearing cover

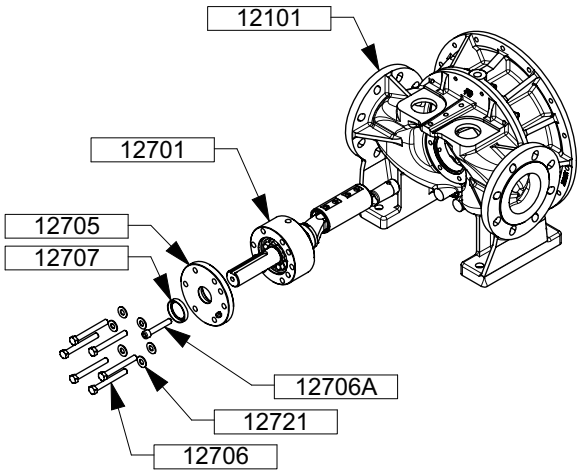

If necessary, fit the lip seal 12707, lip orientated outside in the bearing cover 12705.

Fit the bearing cover 12705 in the bearing cage 12701.

Fit the screw 12706A.

Insert shaft assembly in the main body 12101 taking care to :

- position the screw 12706A on same side as before dismantling. When changing the direction of rotation of the pump, see § REVERSE OF MAIN ROTATION DIRECTION ;
- position bearing cage 12701 drain holes in vertical position (do not confuse with pin hole).

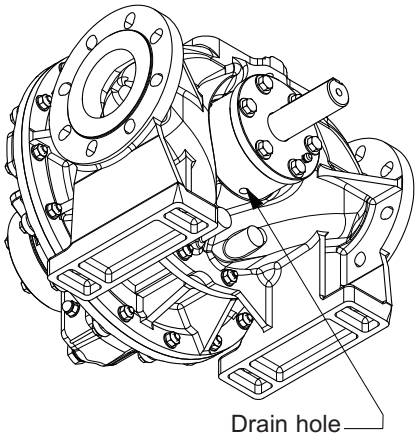

Fit the screws 12706 and theirs new ridged conic washers 12721 with medium thread lock.

If necessary, grease the bearing (see § MAINTENANCE - GREASING).

Follow the instructions in § CYLINDER - PISTON to complete reassembly.

5.6 Bearing

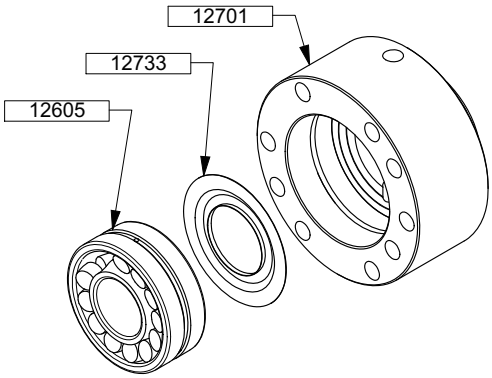

5.6.1 Dismantling

Follow the instructions in § MECHANICAL SEAL.

After removing the bearing cage 12701, remove the bearing 12703 of the cage 12701 with a press.

5.6.2 Reassembly

Clean the bearing housing 12703.

Fit the Nilos seal 12733 in its housing.

Fit the bearing 12703 in the bearing cage 12701 by pressing on its outer ring with a press and a tube.

Follow the instructions in § MECHANICAL SEAL to finish the reassembly.

5.7 Piston bearing

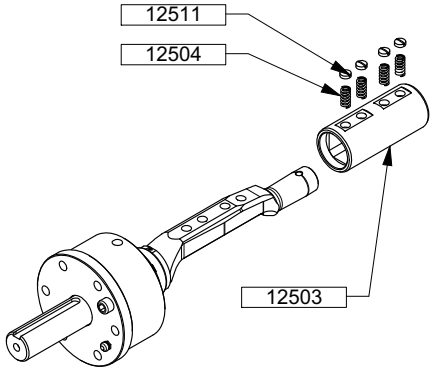

5.7.1 Dismantling

Follow the instructions in § MECHANICAL SEAL to remove the set shaft - bearing cover - bearing cage - seal - bearing - mechanical seal - piston bearing (references 12501 - 12503 - 12504 - 12511 - 12600 - 12627 - (12641 - 12642) - 12701 - 12703 - 12704 - 12705 - 12707 - 12708 - 12717 - 12733).

Remove the screws 12511.

Remove the springs 12504 and check their condition. Replace them if necessary.

Remove piston bearing 12503.

5.7.2 Reassembly

Fit piston bearing 12503.

Fit the springs 12504 in their housings.

Fit the screws 12511.

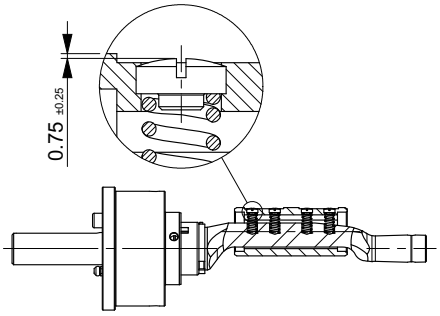

5.8 Slide block

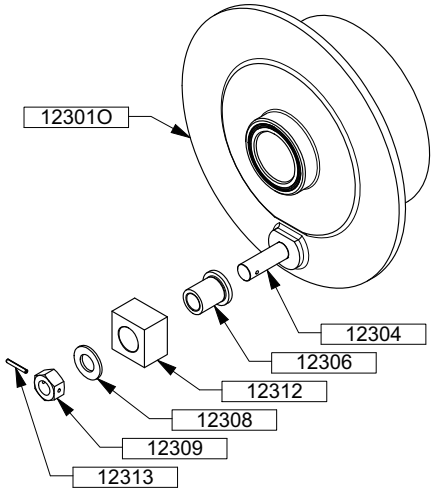

5.8.1 Dismantling

Follow the instructions in § CYLINDER - PISTON.

Remove the pin 12313.

Remove the nut 12309 and its washer 12308.

Remove the slide block 12312 and its bushing 12306 and check their condition. Replace them if necessary.

5.8.2 Reassembly

Fit the slide block bushing 12306 and the slide block 12312.

Fit the nut 12309 and its washer 12308.

Fit the pin 12313.

If necessary, drill 4 mm diameter hole for pin 12313 by drilling both nut 12309 and slide block shaft 12304. If slide block shaft is already drilled, drill the hole perpendicularly to the existing one.

Follow the instructions in § CYLINDER - PISTON to finish the reassembly.

5.9 Slide block shaft

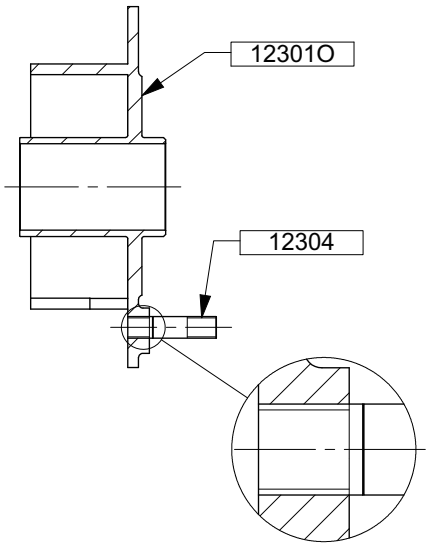

5.9.1 Dismantling

Follow the instructions in § SLIDE BLOCK.

Heat the slide block shaft 12304 to destroy fixing product taking care not to twist the piston.

Remove the slide block shaft 12304.

WARNING

Check parts temperature before dismantling.

5.9.2 Reassembly

Clean threading in piston 12301.

Fit the slide block shaft 12304 until it cannot move any forward with fixing product. Groove must be on piston side.

Adjust slide block shaft 12304 to piston 12301 face by filing section raising above piston face. Do surface finish with thin sandpaper. Piston face must not show scratches.

Follow the instructions in § SLIDE BLOCK to finish the reassembly.

5.10 Slide block pads

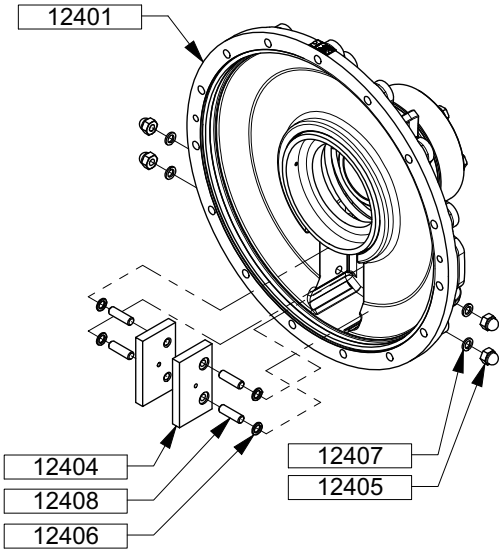

5.10.1 Dismantling

Follow the instructions in § CYLINDER - PISTON.

Remove the nuts 12408 and theirs seals 12407. Check seals condition and replace them if necessary.

Remove the slide block pads 12404 with theirs studs 12405 and theirs seals 12406. Check parts condition and replace them if necessary.

5.10.2 Reassembly

Fit the studs 12405 in the slide block pads 12404 with thread sealant product.

Fit the seals 12406 on the studs 12405 taking care not to damage the seals 12406 on studs 12405 threading.

Fit the slide block pads sets (references 12404 - 12405 - 12406) in the front cover 12401.

Fit the nuts 12408 with theirs new seals 12407.

Follow the instructions in § CYLINDER - PISTON to complete reassembly.

<u>Pump with heating jacket</u> :

Remove the plugs 12462 to reach the nuts 12405. See § PARTICULAR VARIANTS.

5.11 Pusher

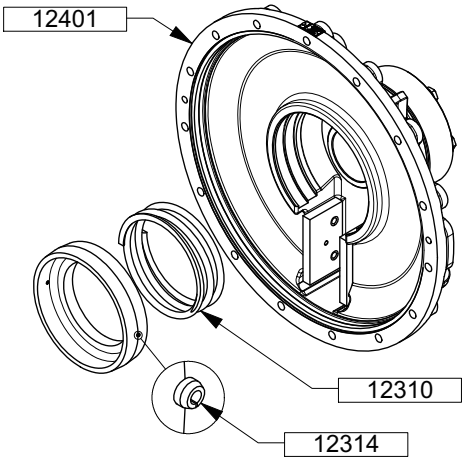

5.11.1 Dismantling

Follow the instructions in § CYLINDER - PISTON.

Remove the pusher 12311 by rotating it to release pins 12314 from their grooves.

Remove the spring 12310. Check its condition and replace it if necessary.

WARNING

Caution: Spring is always slightly pressed.

5.11.2 Reassembly

Position the spring 12310 in the front cover 12401.

Fit the pusher in the front cover 12401 by rotating it to engage pins 12314 in their grooves.

Follow the instructions in § CYLINDER - PISTON to finish the reassembly.

5.12 Relief valve

5.12.1 Opening pressure setting

Before any modification on setting, check :

- That there is a pressure measurement mean on pump discharge ;
- Maximum allowable pressure for discharge installation. This pression corresponds to the lowest maximum allowable pressure among all discharge installation components.

WARNING

During setting operation, operator must make sure never exceeding discharge installation maximum pressure.

Loosen the nut 44835.

Turn the adjusting nut 44834 clockwise to increase discharge pressure, anticlockwise to reduce it.

Once setting is done, tighten counternut 44835.

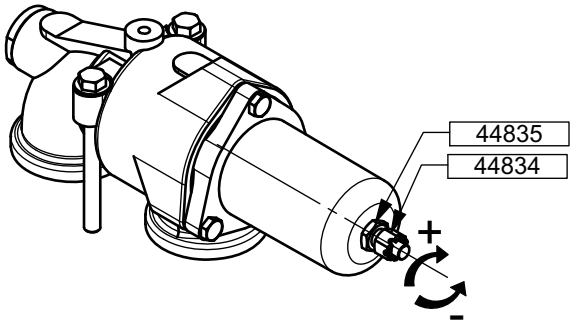

Setting is correct when flow rate is conform to expectation and when motor endures without incident absorbed power peak when discharge is closed. This is how relief valves of complete pumping sets are set, basing on information given to our technical services.

Pumps supplied bare shaft are delivered with a standard setting that should be adjusted depending on exact installation and operation conditions, following procedure above.

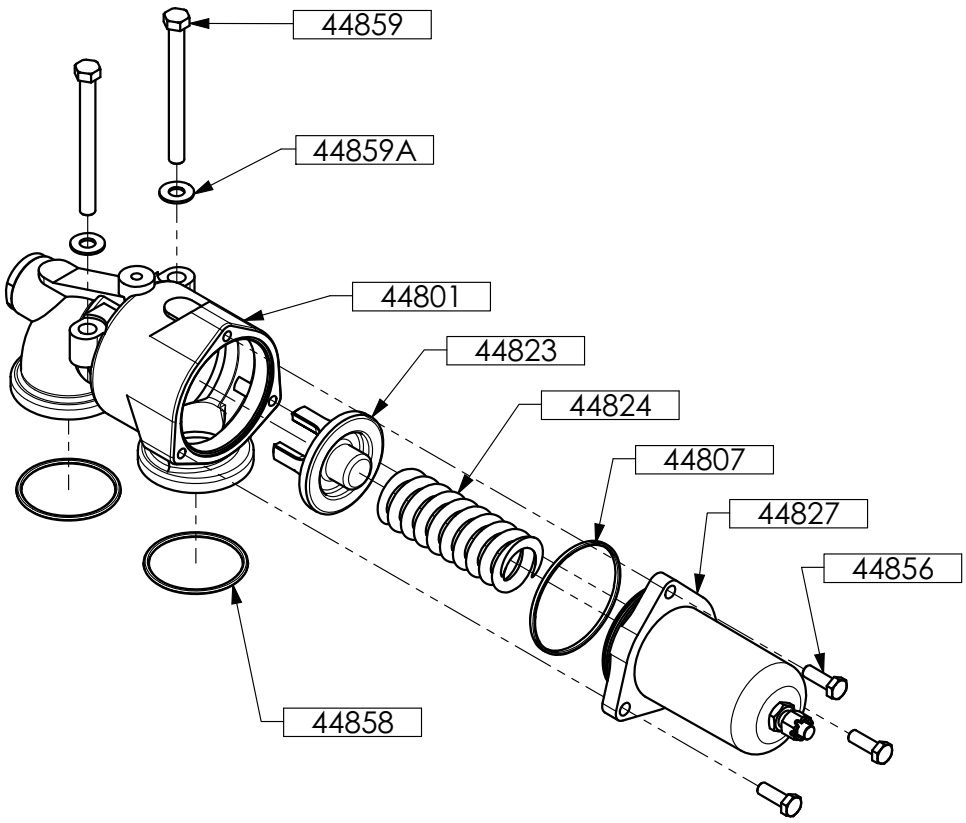

5.12.2 Spring replacement

5.12.2.1 Dismantling

Remove the screws 44859 and theirs washers 44859A.

Remove the seals 44858 and check their condition. Replace them if necessary.

Remove relief valve and put it on a workbench or a flat and clean surface.

Set relief valve opening pressure to its minimum (see § Relief valve - Opening pressure setting).

Keep relief valve vertical for the rest of the operation.

Progressively untight screws 44856.

WARNING

Caution: Spring is always slightly compressed.

Remove the internal relief valve cap 44827 with its adjusting screw set (references 44825 - 44826 - 44826A - 44831 - 44834 - 44835 - 44837).

Remove the seal 44807 and check its condition. Replace it if necessary.

Remove spring 44824 from relief valve.

5.12.2.2 Reassembly

Keep relief valve vertical during operation.

Introduce spring 44824 in the relief valve.

Check position of valve 44823. It must rest flat on its seat and move freely in its housing.

Position the seal 44807.

Put back the internal relief valve cap 44827 with its adjusting screw set (references 44825 - 44826 - 44826A - 44831 - 44834 - 44835 - 44837).

Tighten screws 44856 keeping tightening balanced between the screws.

NOTICE

It is necessary to press the spring before being able to tighten.

Position the seals 44858 in their grooves.

Put back the relief valve on the pump following correct orientation (the internal relief valve cap 44827 must be on suction side).

Take care not to pinch the seals 44858 during the assembly.

Fit the screws 44859 with theirs new ridged conic washers 44859A. Tighten the screws keeping tightening balanced between the screws to keep relief valve in correct position.

Set spring pressure at required value (see § Relief valve - Opening pressure setting).

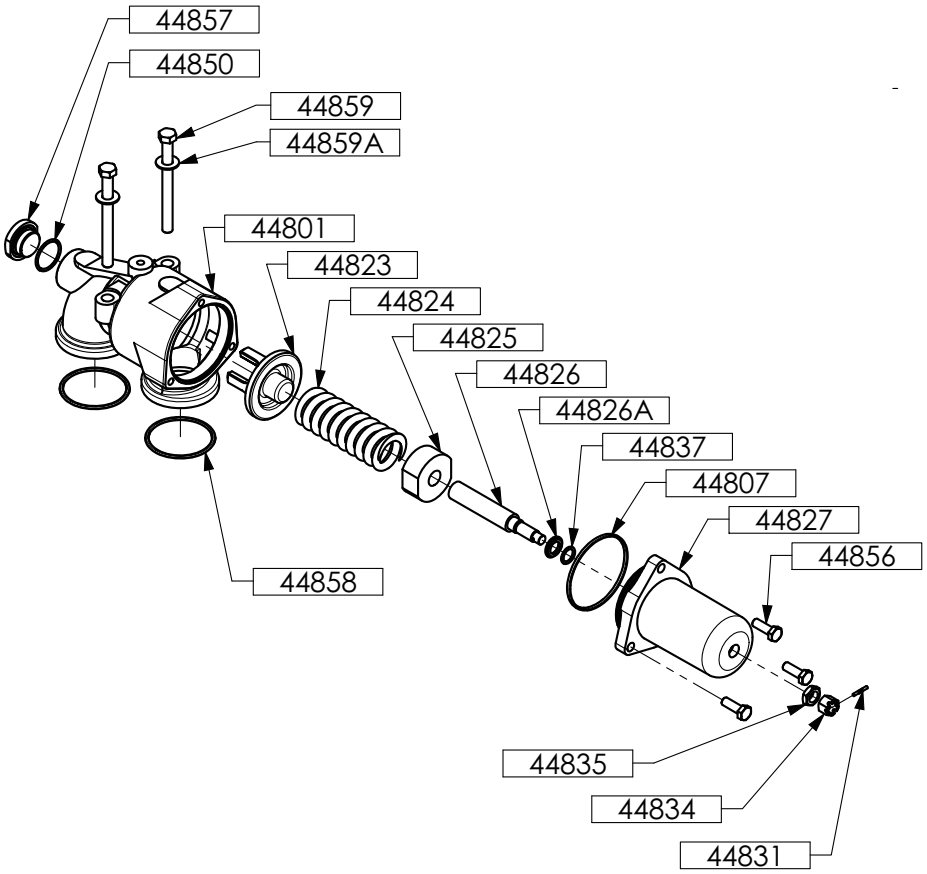

5.13 O-rings replacement

5.13.1 Dismantling

Follow the instructions in § Relief valve - Spring replacement.

Dismantle the adjusting screw set as follows.

Remove the pin 44831.

Remove the nut 44834 and its nut 44835.

Remove the adjusting screw 44826 and its subassembly (references : 44825 - 44826A - 44837).

Remove the seal 44837 and check its condition. Replace it if necessary.

Remove the plug 44857.

Remove the seal 44850 and check its condition. Replace it if necessary.

5.13.2 Reassembly

Position the seal 44850.

Refit the plug 44857.

Fit the spring guide 44825 on the adjusting screw 44826 (left-hand thread).

Position the washer 44826A and the seal 44837 on the adjusting screw 44826.

Fit the set in the cap 44827.

Fit the nut 44835 and the nut 44834.

Fit the pin 44831 in the adjusting screw 44826.

Follow the instructions in § Relief valve - Spring replacement to finish the reassembly.

5.14 Stirrup

5.14.1 Dismantling

Remove the screw 44859 and its washer 44859A.

Remove stirrup 44867.

Remove the stirrup plugs 44865.

Remove the seals 44858 and check their condition. Replace them if necessary.

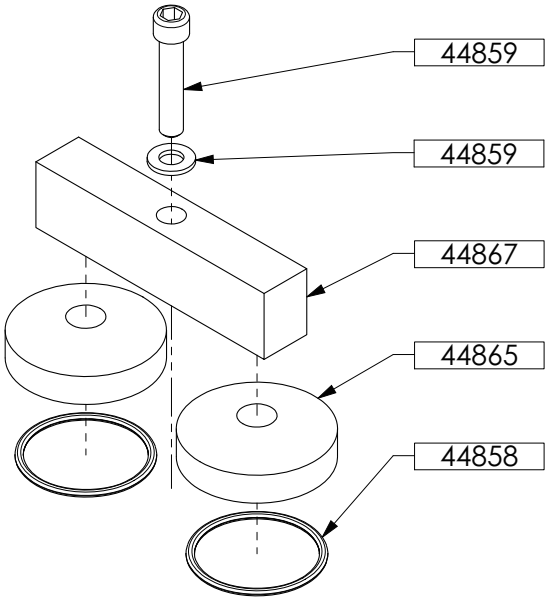

5.14.2 Reassembly

Position the seals 44858 in their grooves.

Fit the stirrup plugs 44865 on the pump.

Take care not to pinch the seals 44858 during the assembly.

Position stirrup 44867.

Fit the screw 44859 with its washer 44859A.

6. MAINTENANCE

6.1 Greasing

Except for special cases, the MOUVEX pump only requires lubrication of the shaft inlet bearing.

Use a grease for ball bearings.

Lubrication must be done every 1,000 hours of operation or at least once a year. or in case of accidental soiling of the grease.

In this case, clean the bearing and its housing before replacing the grease.

The quantity of grease to be added must not exceed 17 cm^3.

For pumps operating at high temperatures (in principle from 100°C upwards) use a grease with a high drop point.

Preference should be given to lubricants insoluble in the product pumped and, in the case of hot products, lubricants that maintain good viscosity at the operating temperature.

The other elements of the pump unit (motor, reduction gear) should be maintained in conformity with their specific technical instructions.

6.2 Checking of parts

Defects listed below require the replacement of parts.

6.2.1 Bushings (12303 - 12415)

Ø interior higher than :

- piston bushing 12303 .....61,9 mm
- front cover bushing 12415 .....46,2 mm

6.2.2 Cylinder and piston (12201 - 12301)

thickness rating less than :

- piston 12301..... 10,4 mm
- cylinder 12201.....111,2 mm

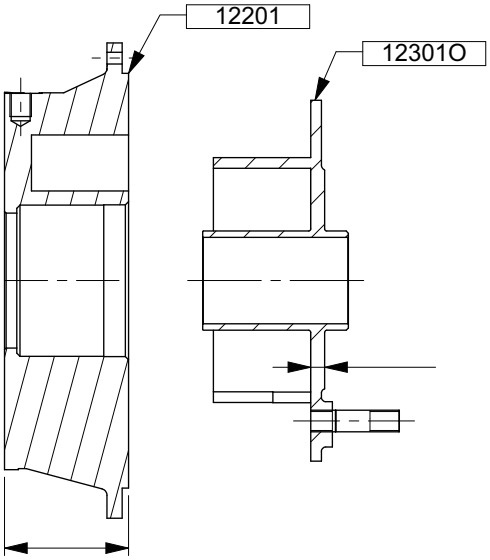

NOTICE

Proper pumping characteristics require a piston and cylinder couple with paired dimensions. Therefore replacement of piston or cylinder requires replacement of the piston/cylinder couple.

6.2.3 Slide block (12312)

- rating on flat less than 49,86 mm
- inside Ø higher than Ø 30,05 mm

6.2.4 Slide block bushing (12306)

- outside Ø less than 29,89 mm

6.2.5 Slide block pads (12404)

- thickness rating less than 11,45 mm

6.2.6 Piston bearing (12503)

- outside Ø less than 59,65 mm

6.2.7 Sleeve (12521)

- outside Ø less than 44,75 mm

6.2.8 Shaft (12501)

- Ø under the lip seal surface less than 39,85 mm
- Ø under the mechanical seal O-ring surface less than 44,95 mm

6.2.9 Springs (12310 - 12504)

- non-rectilinear spring axis
- spring 12310 : free height less than 66 mm
- spring 12504 : free height less than 27 mm

6.2.10 Seals

- scratch
- break
- holes
- permanent deformation of the seal

6.2.11 Bearing (12703)

- Life time exceeded (lifetime : 20 000 hours)
- Feel able hard point during manual bearing rotation
- Unusual noise during pump operation (squeaking…)

NOTICE

The lifetime for the bearing is a theoretical lifetime calculated according to the standard ISO 281 recommendations.

This calculation was performed with the values of speed and acceptable maximal differential pressure and for a acceptable failure rate of 10%.

7. PARTICULAR VARIANTS

If necessary, refer to § Opening of the pump for pump disassembly.

7.1 Pump with heating jacket

The jacketed front cover 12401 permits the circulation of steam or liquid.

The plug 12462 permits the draining of the heating jacket.

To connect the heating jacket, see § Overall dimensions.

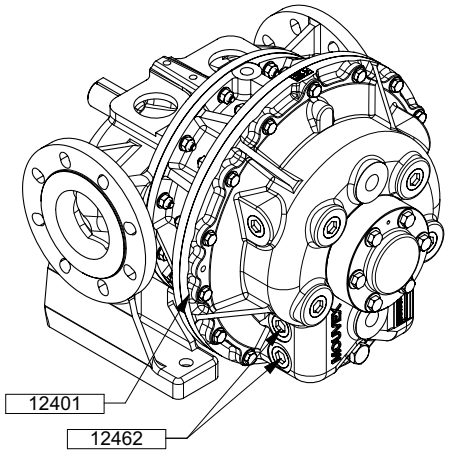

8. STORAGE

If necessary, refer to § Opening of the pump for pump disassembly.

8.1 Short duration (≤ 1 month)

MOUVEX pumps and motor-driven pumps are well lubricated when delivered to protect the internal parts during brief storage in a building where :

- the temperature remains between 10°C and 50°C.
- the relative humidity does not exceed 60%.
- exposure to vibration is limited.
- pump is stored in an area sheltered from bad weather and sun.

NOTICE

In the case of pumps ordered <u>without</u> testing characteristics, it is necessary to grease the inside of the pump before any storage.

8.2 Long duration (> 1 month)

The recommendations from the manufacturer should be followed if the pump is stored with its gear motor.

Pump ports should be filled with a non-corrosive liquid that it compatible with the pump components in order to prevent corrosion.

Unpainted external surfaces of the pump (e.g. shafts, couplings, etc.) should be covered in some form of anti-corrosion protection.

The bearing should be well greased. If the pump is to be stored for more than the life of the grease, this one should be replaced in time to prevent an excessive degradation of its qualities.

The best storage conditions are inside a building that meets the conditions set out above.

If inside storage is not possible, the materials should be covered to prevent direct exposure to sun and bad weather. This protection should also prevent condensation.

Rotate pump shaft manually a few revolutions every two months.

8.3 Restarting

Follow the standard start-up procedure for the pump/motor-driven pump, as well as the instructions below.

Turn the pump by hand to make sure the parts move freely.

Replace the grease used to lubricate the bearing.

If the pump has a safety relief valve, remove it and inspect the parts and make sure they move freely (see § Relief valve for removal instructions).

9. SCRAPPING

The pump must be scrapped in compliance with the regulations in force.

During this operation, particular care must be paid to the drainage stages of the pump (pumped product).

10. TECHNICAL CHARACTERISTICS

10.1 Weight and center of gravity

10.1.1 Weight

From 135 to 165 kg depending on variants.

10.1.2 Center of gravity

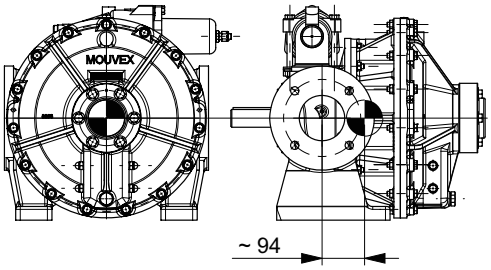

NOTICE

The position of the center of gravity may vary slightly depending on the chosen options (relief valve, stirrup, front cover with heating jacket...) and the position of the moving parts inside the pump.

10.2 Overall dimensions

See following pages.

10.3 Curves

Consult our Technical Services.

10.4 Operation limits and characteristics

Acceptable maximum suction pressure..... 9 barg[a]

Acceptable maximal differential pressure :
carbon bushings .....10 bar
bronze bushings ..... 5 bar

Acceptable maximum discharge pressure.....12 barg

Acceptable maximum pressure in heating jacket... 8 barg

Acceptable maximum speed .....350 rpm

Ambient temperature :
acceptable minimum ..... - 15°C
acceptable maximum ..... + 40°C

Pomped product temperature :
acceptable minimum ..... - 15°C
acceptable maximum (see [b])..... + 150°C

Heating fluid temperature[c] :
acceptable minimum ..... - 15°C
acceptable maximum ..... + 150°C

Maximum flowrate[d] .....53 $m^3.h^{-1}$

Cylinder capacity .....2,533 L

CAUTION

The definition of the pump operating conditions (speed, differential pressure, viscosity or pomped product) must be performed by MOUVEX qualified personnel or any other person authorized.

[a] **NOTICE : In the case of a pressure suction higher than the atmospheric pressure, provide a valve to prevent the flow of liquid when the pump is stopped.**

[b] Maximum temperature of pumped product is highly dependent on the operating conditions (pressure, speed, viscosity ...). Please contact our technical department to set the maximum allowable temperature for your application.

[c] The maximum temperature of heating fluid should be selected so that the pumped product temperature is compatible with the one defined for the application.

[d] This value can vary depending on your application parameters. You can contact our Technical Services at any time to ask for the information you

Overall dimensions

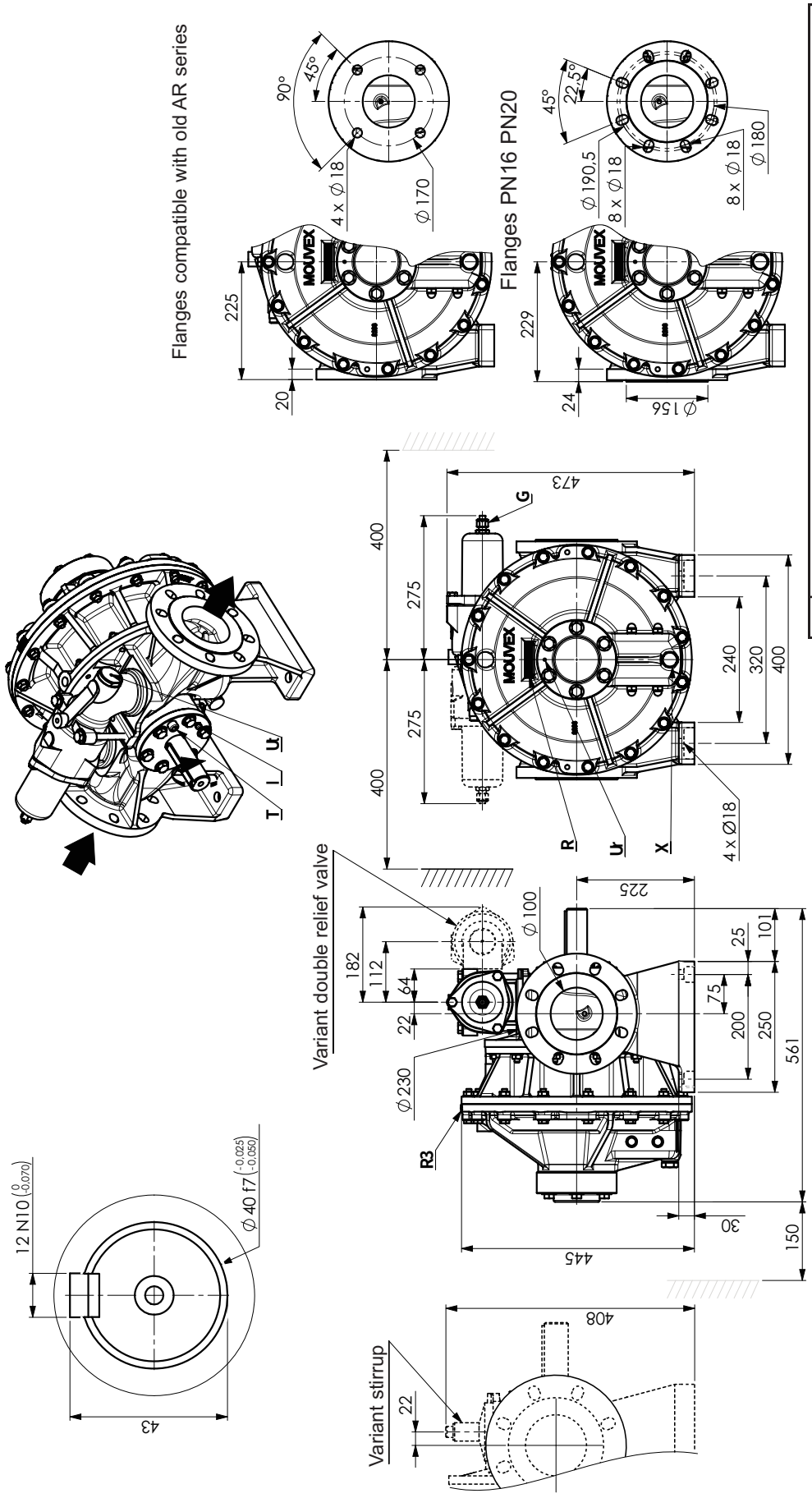

E	Relief valve setting.
G	Grease nipple
P	Pump plate.
P1	Pump rotation direction plate.
R	Main rotation direction index.
Sp	Mounting point for pump probe : M6 - threaded width : max. 8 mm.
Sr	Mounting point for relief valve probe : M6 - threaded width : max. 8 mm.
V	Pump drain G3/8".

A55 A
with heating jacket

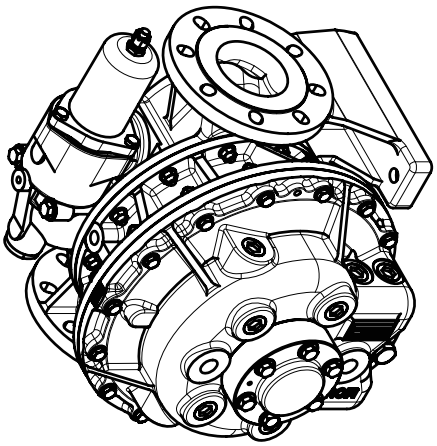

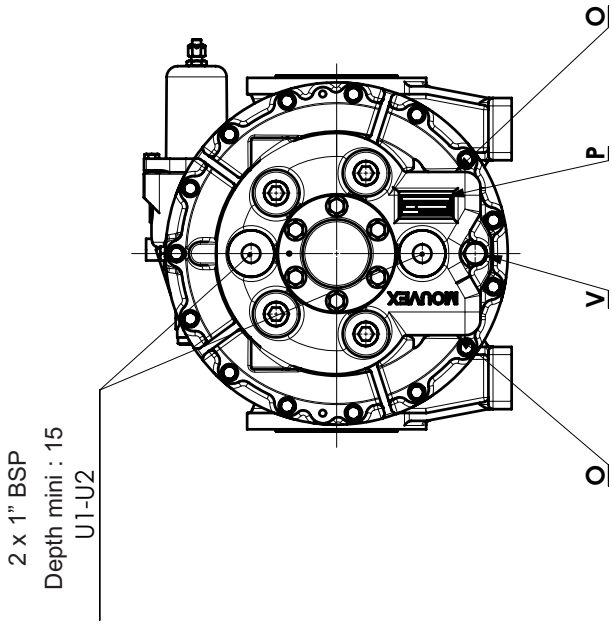

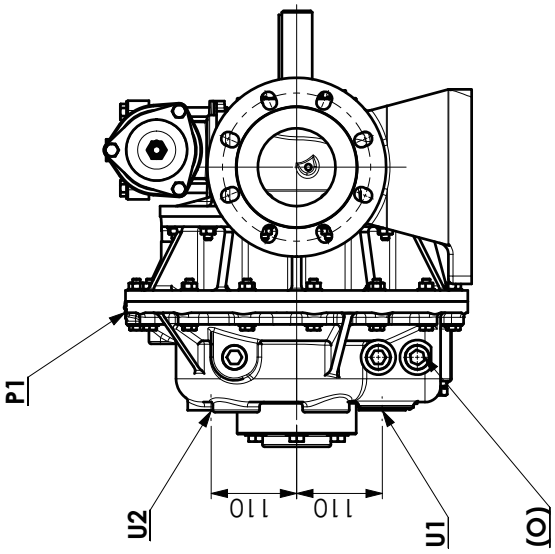

O	Heating jacket drain G1".
P	Pump plate.
P1	Pump rotation direction plate.
U1	Heating jacket inlet for liquid Heating jacket outlet for steam
U2	Heating jacket outlet for liquid Heating jacket inlet for steam
V	Pump drain G3/8".

11. TROUBLESHOOTING

ZERO OR INSUFFICIENT FLOW			
1			**PRELIMINARY CHECKS**
	1-1		Make sure that the plastic plugs have been taken away from the ports of the pump and that the pump is running (defective drive, damaged motor, etc., faulty transmission : broken coupling, sliding belt, worn or poorly coupled clutch, etc.).
	1-2		Make sure that the pump rotates in the correct direction corresponding to the direction in which the liquid circulates in the installation (cf. the pump plate). If necessary, change the electric motor connections or adjust the piping as necessary (diesel engine drive).
	1-3		Make sure that there is liquid in the tank from which the pump draws and that the end of the inlet piping is constantly submerged.
	1-4		Make sure that the pump rotation speed is sufficient. Determine this by checking the speed of the pump motor (see motor plate) and the speed reduction ratio (see reduction gearbox plate) or use a rev. counter.
			If these checks do not highlight the problem :
2			**MEASURE THE DISCHARGE PRESSURE** (as close to the outlet of the pump as possible, with a minimum distance of 5 pipe diameters).
	2-1		If the pressure is lower than the figures given for the material, or null, this could be due to :
		2-1-1	A poorly adjusted relief valve, the valve setting is lower than the discharge pressure (tighten the set screw or replace the spring after checking that the electric motor is suitably protected).
		2-1-2	The valve is not closed ; either the plunger has not returned to its initial position, or there is dirt on the valve seat.
		2-1-3	The pump is worn, this will also affect the suction capacity of the pump (cf 3-2-2 c).
	2-2		If the pressure complies with the equipment data (pump speed and motor output) it is possible that :
		2-2-1	The pressure required for the given installation to obtain the required flow rate is too high and the flow is partially or totally circulating via the relief valve, or : a. the height of the discharge is too great (reduce it by bringing the discharge tank to the level where the pump is). If suction conditions are favourable, the pump can also be moved closer to the discharge tank. b. that head losses are too high because : - the piping is unsuitable (too many "bends", too long or the diameter is too narrow) for the process conditions : Flowrate, Specific Gravity, Viscosity (this can change considerably with temperature). Reduce the head losses by simplifying the circuit : reduce of the number of fittings, valves, elbows, etc... Move the pump closer to the discharge tank or vice versa, if conditions permit. Increase the diameter of the piping, etc... Reduce the product viscosity via heating. Reduce the flow, etc... - of partially blocked piping (valve partially closed, tap partially shut, cloth obscuring flow, etc.).
		2-2-2	The discharge piping is completely blocked (valve fully closed, tap completely closed, cloth plugging flow, full protection seal left by carelessness, etc...), in this case, all the liquid passes via the relief valve.

3			**MEASURING THE VACUUM PRESSURE** (as close as possible to the pump inlet, inlet side).
	3-1		If the vacuum is high, e.g. higher than or equal to 6 to 7 metres WC (0.6 to 0.7 bara i.e. about 45 or 50 cm of mercury), this can result in pump noise. The cause could be :
		3-1-1	a. the suction lift is too high (reduce it by taking the pump down closer to the level of the liquid) b. the dynamic suction losses are too high : 1. cf 2-2-1 b 2. the inlet piping orifice is too close to the bottom of the tank.
		3-1-2	The inlet piping is completely blocked (valve, tap, filter, cloth, full seal forgotten, etc.)
		3-1-3	The liquid vapour pressure is too high (or has become too high following, for example, a change of temperature). Bring the pump closer to the level of the liquid, install the pump closer to the feed or cool the liquid to reduce the vapour pressure.
	3-2		If the vacuum is low, for example, less than 3 metres WC (i.e. about 20 cm of mercury), check for leaks on the inlet pipe, isolate the pump from the inlet piping (by closing the valve nearest the pump or by inserting a full flange seal) and measuring the vacuum once again.
		3-2-1	If the vacuum is high with the isolating valve closed on suction line, e.g. higher than or equal to 6 or 7 metres WC (i.e. about 45 to 50 cm of mercury), the pump is not the cause : a. there must be an air inlet upstream of the pump isolating valve. b. the liquid vapour pressure is or has become too elevated due to a change of temperature (cf 3-1-3).
		3-2-2	If the vacuum is low or non-existent, the reason could be : a. that the valve is not closing properly, due to dirt on the valve seat. b. air is entering the pump (check the front cover seals, flanges, etc...) c. the pump is worn and the internal tightness is out of specification (the piston bushings are worn, worn piston and cylinder, broken piston wear compensation springs, worn partition, broken shaft).
ABNORMAL HEATING OF BEARINGS			
4			This heating can be caused by :
	4-1		- excessive tension in the transmission (belt or chain) on the pump shaft.
	4-2		- excessive pulling on the pump flanges by the piping (in this case, it must have been necessary to force the piping into position to connect it to the pump).
	4-3		- poor alignment of the pump - due for example to 4-2 (the pump is partially or totally uncoupled, the pump shaft and drive shaft are not aligned with each other).
	4-4		- inadequate anchoring of the pump unit leading to deformation of the chassis (make sure that the chassis is clear of the ground except for the 3 anchoring points).
	4-5		- seizing of the bushings (cured product preventing lubrication and cooling, excess power, etc...).
	4-6		- running in period for new bearings. The temperature should return to normal values after a few operating hours.
LEAKING SEALS			
5			The seal may leak if : a. it was damaged during assembly (scratching on the shaft), damage to 'O'rings in seal, b. it is incompatible with the product (chemical and mechanical aggression / abrasion of 'o' rings and seal faces), c. it is worn through normal use.
6			The shaft is worn at the seal or does not rotate correctly due to poor alignment, excessive tension on the transmission belts, chains, etc...

			ABNORMAL NOISES
			These noises can be caused by hydraulic and mechanical sources. They can be distinguished by the fact that only the former disappear (or at least lessen) when air is allowed into the inlet pipe.
7			**HYDRAULIC NOISES**
			These noises can come from insufficient product being supplied to the pump, or :
	7-1		- the rotation speed is too high for the installation conditions (increase of viscosity due to a change of product or a reduction of temperature, etc.).
	7-2		- that the suction head is too high or has become too high due to excessive head losses following clogging of the piping or filter, a change of viscosity of the liquid, etc.,
	7-3		- an increase of the vapour pressure with a rise of temperature.
8			**MECHANICAL NOISES**
			These can stem from :
	8-1		- the relief valve knocking on the seat when the discharge pressure is close to the relief valve adjustment pressure (turn the adjustment screw after making sure that the electric motor is suitably protected).
	8-2		- abnormal stress on the pump : the transmission is pulling on the shaft, pulling on the flanges by the piping.
	8-3		- a broken part or foreign body has entered the pump.
			EXCESS POWER CONSUMPTION
9			The most spectacular event occurs when a diesel engine stalls or the power to an electric motor is shut off.
	9-1		If this incident occurs when closing the discharge line, the cause may be : a. the relief valve is assembled back to front. b. the relief valve is adjusted too tight. c. the motor protection is adjusted too low or wrong circuit breaker have been fitted.
	9-2		If the incident occurs during operation, the cause could be : a. an inadequate motor (in this case, the discharge pressure complies with what was expected). b. head losses higher than expected - following higher viscosity or specific gravity than planned initially (in this case, the discharge pressure is higher than that planned. The pressure can be reduced by loosening the relief valve adjustment screw - the flow is decreased). c. excessive speed of rotation. d. a fault of the equipment (faulty alignment, deformation of the chassis, stress exerted by the piping on the flanges, seizing, etc.).
			Excessive consumption of electricity can also be due to a poor motor connection (e.g. a 3 phase motor operating on 2 phases).