Blackmer COMPRESSORS

HDL173C PARTS LIST

(See Instructions 901-C00 for Operation and Maintenance)

Serial #_____ ID#_____ _____ _____

Gasket Sets and Special Tools

Gasket Set	Buna-N & Iron	792465
	FKM & Iron	792466
	PTFE & Iron	792467
	Neoprene & Iron	792468
	Ethylene Propylene & Iron	792469
Packing Installation Tool		790536
Spanner Wrench, 1/4" Adjustable		790316
Wrench for Valve Hold Down Screw		790535
Piston Torque Tool		798002 & 798020
Tool Kit		790199

Table of Contents

Cover page	1
Crankcase	2
Oil Pump	3
Flywheel	4
Crosshead	5
Packing	6
Cylinder	7
Intercooler	8
Head	9
Head with Unloaders	10

Notes:

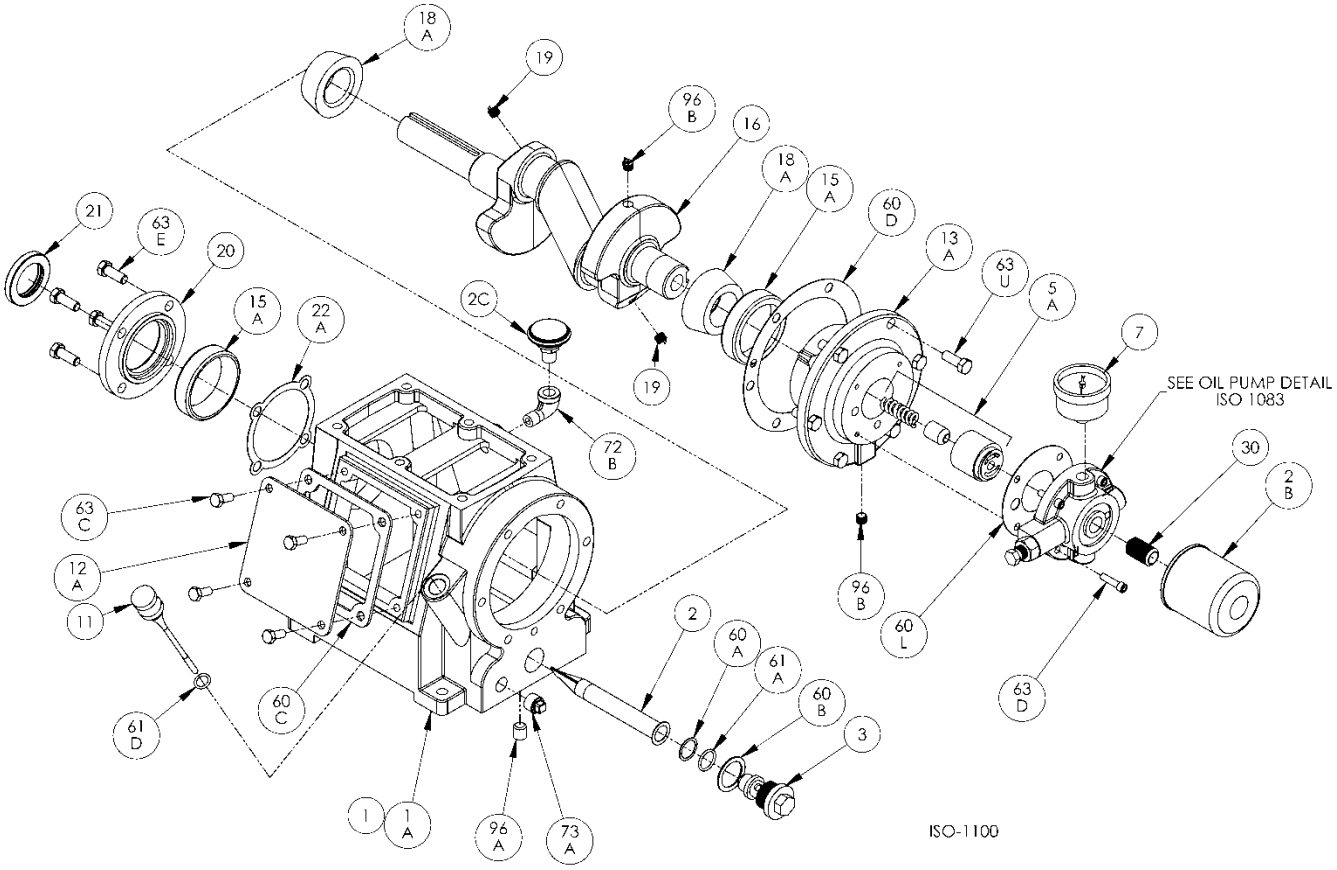

Crankcase Assembly: Models HD161B, HD161C, HD162B, HD162C, HD163B, HD163C, HDS162C
HD172B, HD172C, HD173B, HD173C, HDL172C, HDL173C, HDS172C ISO1100

Ref	Description	Qty	Part No
1	Crankcase Assembly – with Oil Filter	1	792100
	Crankcase Assembly – no Oil Filter		792103
	Crankcase Assembly – with Ext Shaft		792155
	Crankcase Assy - with Ext Shaft & Oil Filter		792171
1A	Crankcase	1	792102
2	Oil Intake Screen	1	792135
2B	Oil Filter	1	794726
2C	Breather Filter	1	792070
3	Oil Screen Plug	1	792145
5A	Oil Pump Kit	1	794760
7	Oil Pressure Gauge	1	790012
11	Oil Bayonet Assembly	1	792162
12A	Inspection Plate	1	792105
13A	Bearing Carrier	1	792104
15A	Bearing Cup	2	793126
16	Crankshaft Assembly (w\ 18A,19,96B)	1	792157
	Crankshaft Assembly-Ext (w\ 18A,19,96B)		792191
18A	Bearing Cone	2	793142
19	Orifice	2	792146

Ref	Description	Qty	Part No
20	Bearing Cover Plate	1	793106
21	Oil Seal	1	793143
22A	Bearing Adjustment Shim Kit	1	793133
30	Oil Filter Fitting	1	794725
60A	Gasket - Oil Screen *	1	792136
60B	Gasket - Oil Screen Plug *	1	792123
60C	Gasket - Inspection Plate *	1	792122
60D	Gasket - Bearing Carrier Assembly*	1	792124
60L	Gasket - Oil Pump Cover *	1	794721
61A	O-Ring - Oil Screen *	1	792175
61D	O-Ring - Oil Bayonet *	1	792174
63C	Capscrew - Hex Hd	4	793116
63D	Capscrew - Soc Hd	4	790559
63E	Capscrew - Hex Hd	4	792093
63U	Capscrew - Hex Hd	6	792093
72B	Elbow	1	790453
73A	Pipe Plug	1	792166
96A	Pipe Plug	1	790488
96B	Pipe Plug	2	790309

* Included in Gasket Sets

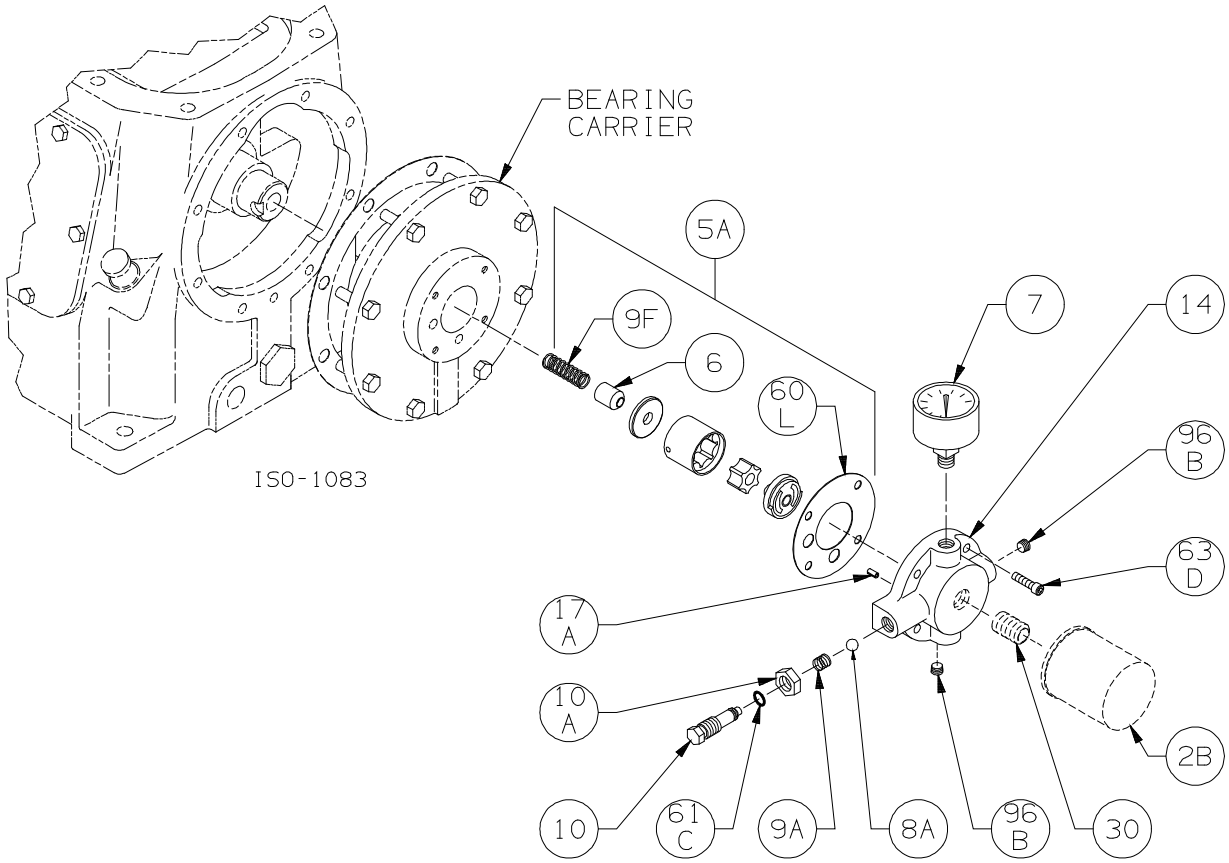

Oil Pump Detail for Models:
HD082C, HD161C|B, HD162C|B, HD163C, HDS162C
HD172C|B, HD173C, HDL172C, HDL173C, HDS172C,
HDL342C|B, HDL343C|B, HDL322C, HDL323C
HD361C|B, HD362C|B, HD363|B, HDS362C, HDL362C|B, HDL363C|B,
HD372C|B, HDL372C|B, HD373C, HDL373C|B, HDS372C
HD601B, HD602C|B, HD603C|B, HDL602C|B, HDL603C|B, HDS602C, HDL642C|B, HDL643C|B,
HD612C|B, HDL612C|B, HD613C|B, HDL613C|B, HDS612C|B
HD942B|A, HDL942B|A, HDS942B, HD943B, HDL943B

ISO1083

Ref	Description	Qty	Part No
2B	Oil Filter	1	794726
5A	Oil Pump Kit (with 6, 9F, 60L)		794760
6	Oil Pump Cone	1	794750
7	Oil Pressure Gauge	1	790012
8A	Oil Pressure Adj. Ball	1	792154
9A	Oil Pressure Adj. Spring	1	792153
9F	Oil Pump Spring	1	794751
10	Oil Pressure Adj. Screw	1	792148
10A	Locknut	1	792152

Ref	Description	Qty	Part No
14	Oil Pump Cover Assembly - For Filter Oil Pump Cover Assembly (both include 17A, 96B)	1	794764 794763
17A	Roll Pin	1	794753
30	Oil Filter Fitting	1	794725
60L	Gasket - Oil Pump Cover *	1	794721
61C	O-Ring - Adjusting Screw *	1	792168
63D	Capscrew - Socket Head	4	790559
96B	Pipe Plug	2	790309

* Included in Gasket Sets

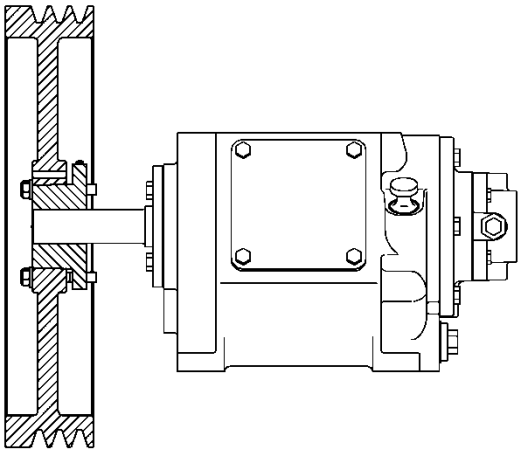

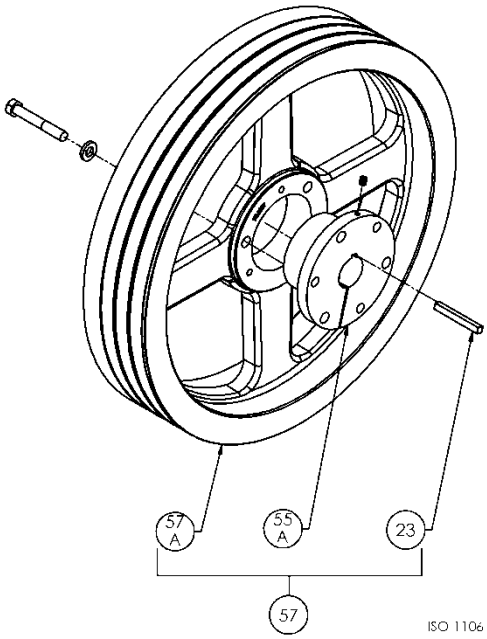

Models:
HD082C
HD161C, HD161B
HD162C, HD162B
HD163C, HD163B

HD172C, HD172B
HD173C, HD173B
HDL172C, HDL173C
HDS172C

Ref	Description	Qty	Part No
23	Key	1	792167
55A	Hub (SF 1.25”)	1	790563
57	Flywheel Assembly	1	792073
57A	Flywheel	1	792197

Note: Earlier HD172C, HD172B, HD173C and HD173B air-cooled compressors had a fan fitted to the flywheel.

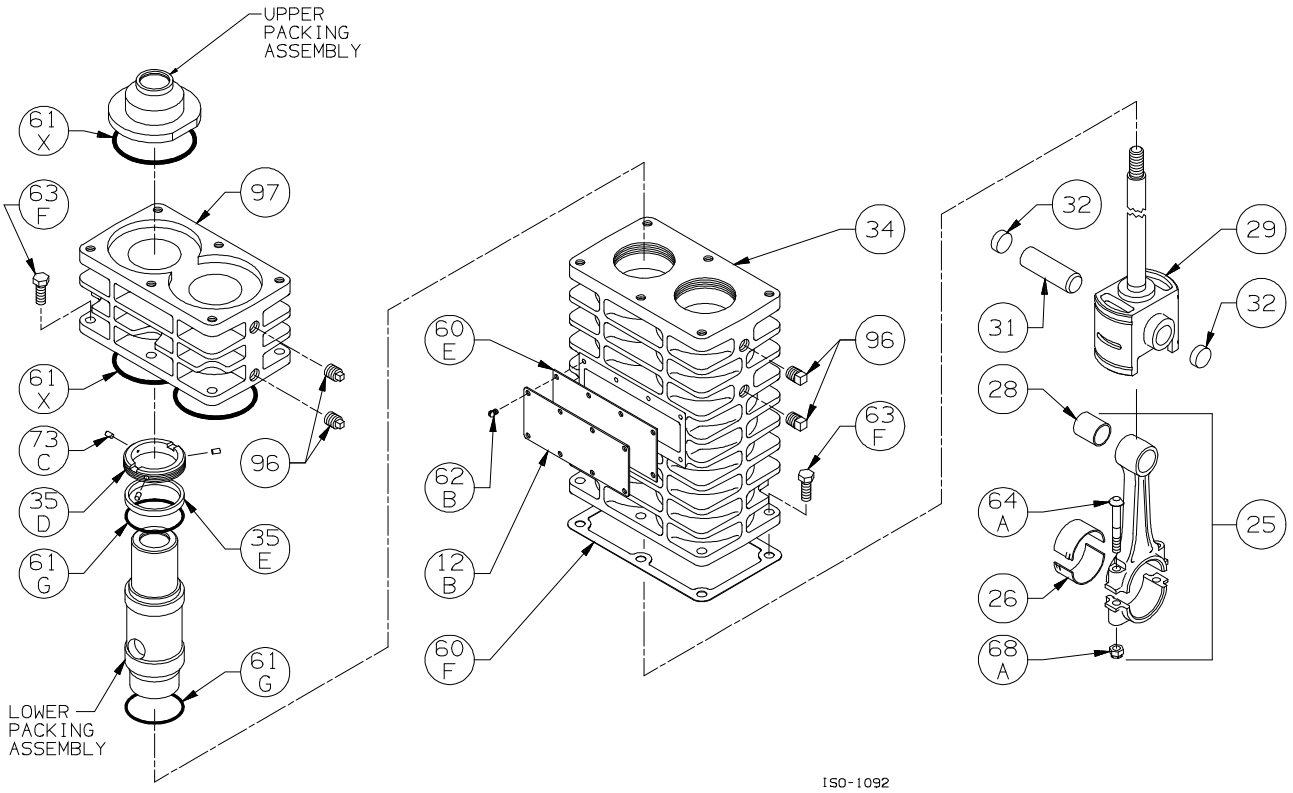

Crosshead Assembly: HD163C, HD173C, HDL173C

ISO1092

Ref	Description	Qty	Part No
12B	Inspection Plate	1	792017
25	Connecting Rod Assembly	2	792301
26	Connecting Rod Bearing	2	792012
28	Wrist Pin Bearing	2	792302
29	Crosshead Assembly	2	792406
31	Wrist Pin	2	792014
32	Wrist Pin Plug	4	792178
34	Crosshead Guide	1	792455
35D	Hold-down Ring	2	793220
35E	Spacer Ring	2	793402
60E	Gasket - Inspection Plate *	1	792092
60F	Gasket - Crankcase *	1	792121
61G	O-Ring (Buna-N) Std *	4	792125
	O-Ring (FKM) *		793213
	O-Ring (PTFE) *		793211
	O-Ring (Neoprene) *		793215
	O-Ring (Ethylene Propylene) *		793207

Ref	Description	Qty	Part No
61X	O-Ring (Buna-N) Std *	4	792112
	O-Ring (FKM) *		792213
	O-Ring (PTFE) *		792210
	O-Ring (Neoprene) *		792110
	O-Ring (Ethylene Propylene) *		792206
62B	Machine Screw - Inspection Plate	8	793096
63F	Capscrew - Hex Hd	12	792093
	Capscrew – Stainless Steel #		098392
64A	Connecting Rod Bolt	4	792006
68A	Connecting Rod Bolt Nut	4	792005
73C	Lock Plug *	6	792030
96	Pipe Plug	8	908198
97	Distance Piece	1	792402

*Included in Gasket Sets

Standard with TNT-12 Cylinder

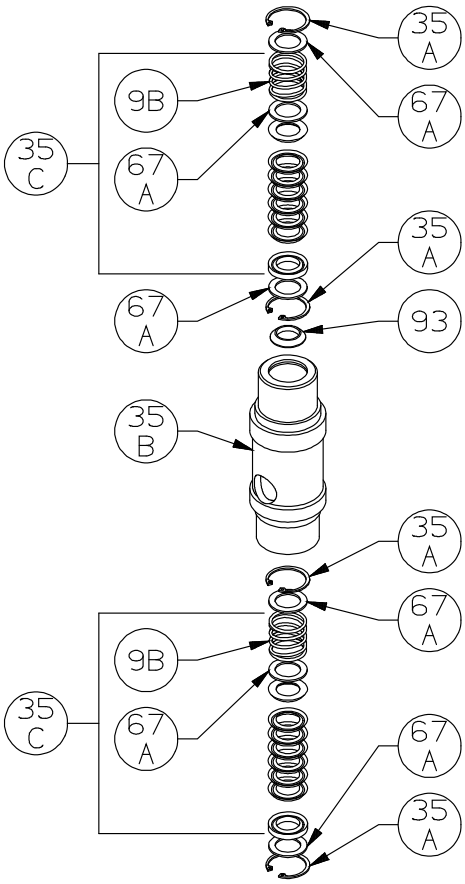

LOWER PACKING ASSEMBLY

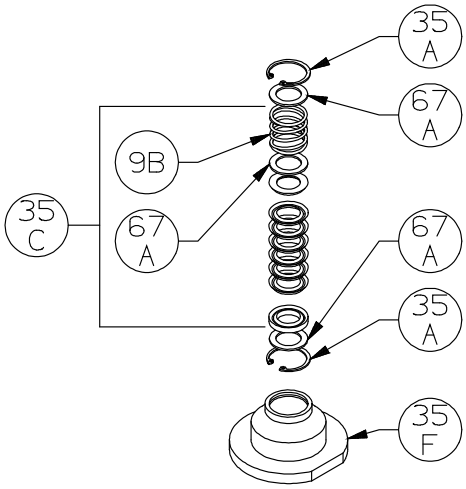

UPPER PACKING ASSEMBLY

ISO-1091

Packing Assembly: HD163B, HD163C,
HD173B, HD173C, HDL173C ISO1091

Ref	Description	Qty	Part No
9B	Packing Spring	6	792077
35A	Retainer Ring	12	793404
35B	Packing Box - Lower	2	792502
35C	Packing Set	6	793510
35F	Packing Box - Upper Packing Box - Upper TNT-12	2	792404 792884
67A	Washer - Packing Box	18	792087
93	Oil Deflector Ring	2	793478

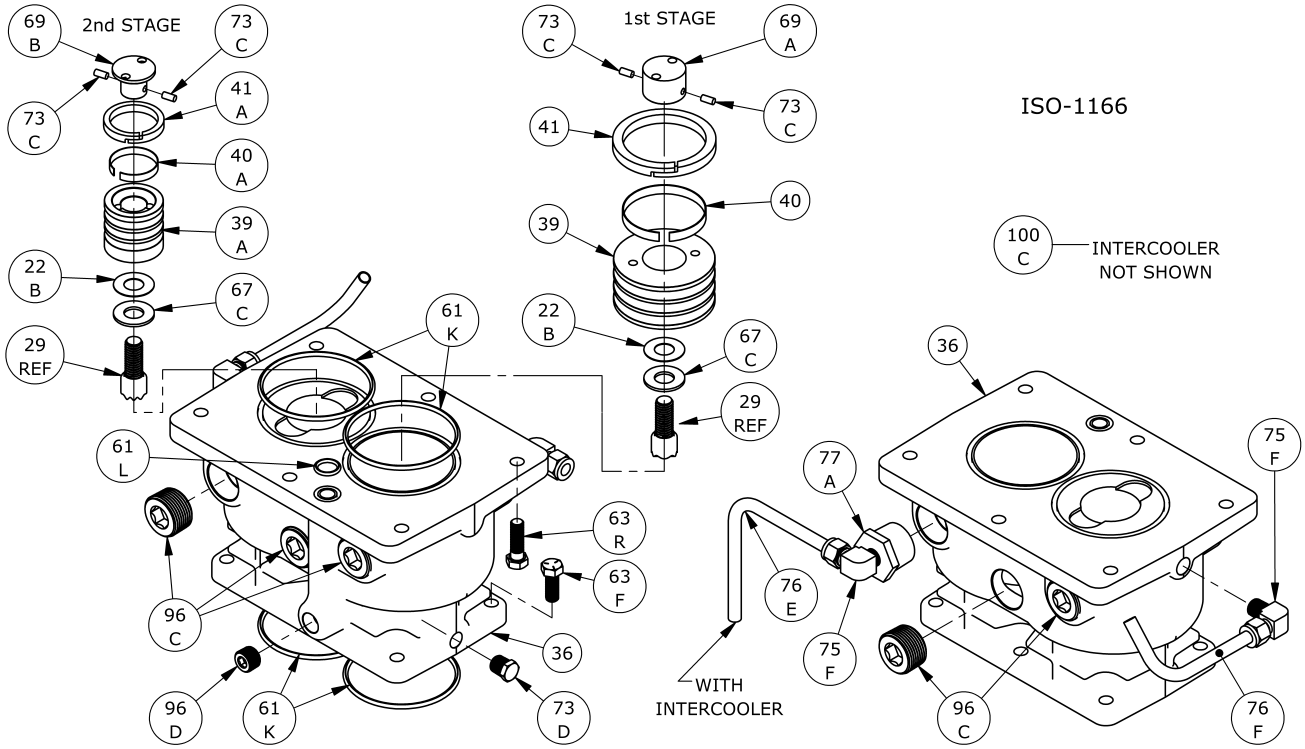

Cylinder Assembly: HDL172C, HDL173C

Ref	Description	Qty	Part No
22B	Piston Shim - 0.015 Piston Shim - 0.007	AR	792034 792050
36	Cylinder – water-cooled Cylinder – water-cooled TNT-12	1	792321 792323
39	Piston Piston TNT-12	1	792431 792807
39A	Piston Piston TNT-12	1	792458 792880
40	Expander	3	794615
40A	Expander	3	792409
41	Piston Ring – Glass/Moly Filled, Std Piston Ring - Poly Filled	3	792420 792421
41A	Piston Ring – Glass/Moly Filled, Std Piston Ring - Poly Filled	3	792407 792408
61K	O-Ring (Buna-N) Std * O-Ring (FKM) * O-Ring (PTFE) * O-Ring (Neoprene) * O-Ring (Ethylene Propylene) *	4	792112 792213 792210 792110 792206

ISO1166

Ref	Description	Qty	Part No
61L	O-Ring (Buna-N) Std * O-Ring (FKM) * O-Ring (PTFE) * O-Ring (Neoprene) * O-Ring (Ethylene Propylene) *	1	792114 792212 792211 792118 792207
63F	Capscrew - Hex Hd Capscrew – Stainless Steel #	6	792093 098392
63R	Capscrew - Hex Hd Capscrew – Stainless Steel #	6	920351 920365
67C	Thrust Washer	2	792033
69A	Piston Nut Piston Nut TNT-12	1	793022 792808
69B	Piston Nut Piston Nut TNT-12	1	792459 792881
73C	Lock Plug *	4	793028
73D	Pipe Plug	1	908198
75F	Tube Elbow	2	790367
76E	Tube 3/8” Copper	1	790443
76F	Tube 3/8” Copper	1	790444
77A	Bushing	1	790433
96C	Pipe Plug – 1” Socket	5	790452
96D	Pipe Plug – 3/8” Socket	1	908202
100C	Intercooler, H_2O, Brass	1	793702 [1]

* Included in Gasket Sets

\# Standard with TNT-12 Cylinder

[1] Many compressors are supplied with custom intercoolers - please verify this PN with Blackmer prior to placing an order

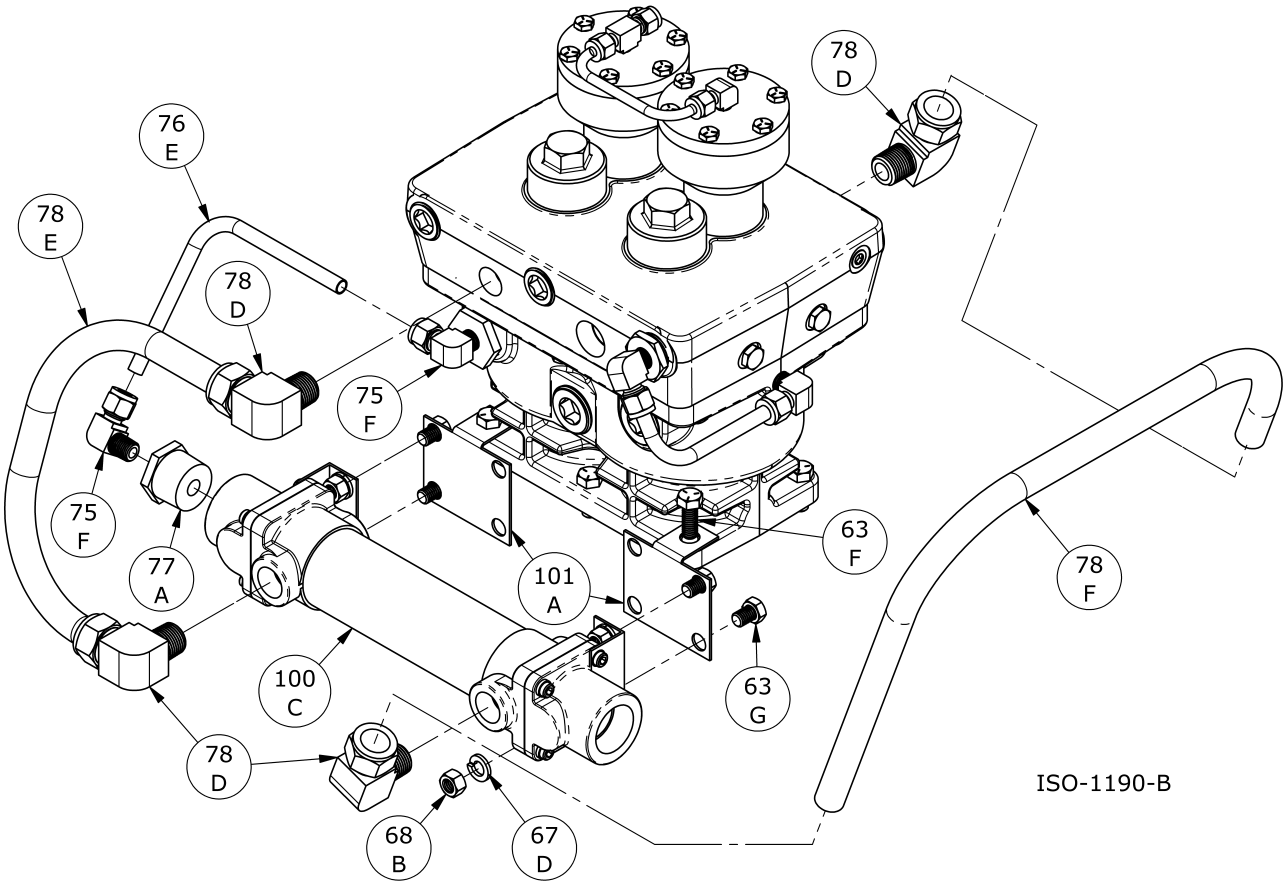

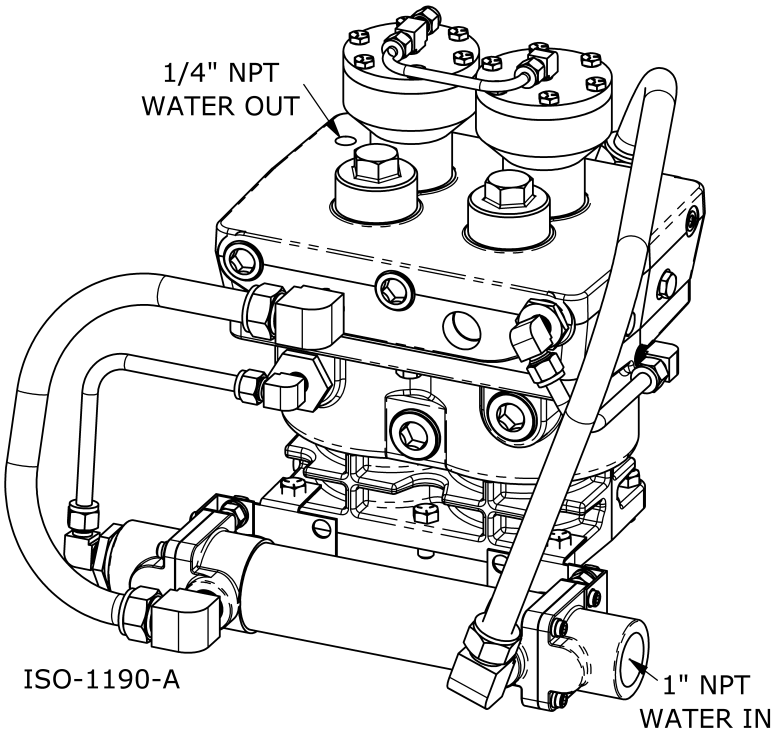

Intercooler Assembly: HDL172C, HDL173C ISO 1190

Ref	Description	Qty	Part No
63F	Capscrew - Hex Hd Capscrew – Stainless Steel #	2	792093 098392
63G	Capscrew – Hex Hd	4	793158
67D	Lock Washer	4	909694
68B	Hex Nut	4	790216
75F	Tube Elbow	2	790367
76E	Tube 3/8” Copper	1	790443
77A	Pipe Bushing	2	790433
78D	Tube Elbow	4	790392
78E	Tube 3/4" SS	1	790447
78F	Tube 3/4" SS	1	790448
100C	Intercooler, Water-cooled, Brass	1	793702[1]
101A	Intercooler Bracket	2	793704

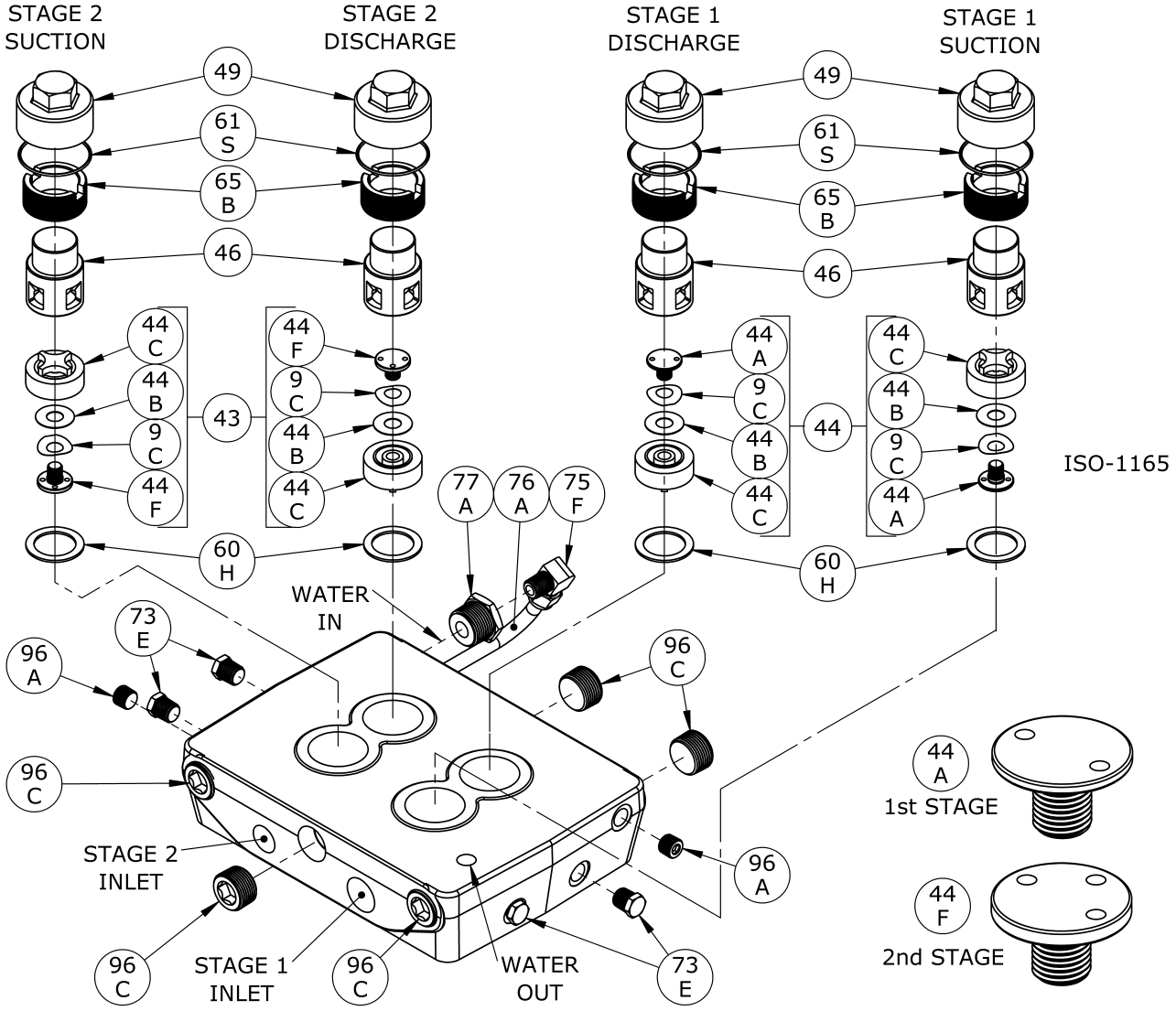

Head Assembly: HDL172C, HDL173C

Ref	Description	Qty	Part No
9C	Valve Spring	4	792038
42A	Head, water-cooled (HDL) Head TNT-12, water-cooled (HDL)	1	792322 792324
43	Valve Assembly - 2nd Stage	2	792064
44	Valve Assembly - 1st Stage	2	792056
44A	Valve Bumper - 1st Stage	2	792054
44B	Valve Disc	4	792037
44C	Valve Body	4	792055
44F	Valve Bumper - 2nd Stage	2	792066
46	Cage	4	792051
49	Valve Cap Valve Cap TNT-12	4	792003 792804
60H	Gasket - Valve *	4	792201

* Included in Gasket Sets

ISO1165

Ref	Description	Qty	Part No
61S	O-Ring (Buna-N) Std * O-Ring (FKM) * O-Ring (PTFE) * O-Ring (Neoprene) * O-Ring (Ethylene Propylene) *	4	792306 792308 792307 792309 792310
65B	Valve Holddown Screw Valve Holddown Screw TNT-12	4	792002 792806
73E	Pipe Plug	3	908198
75F	Tube Elbow	1	790367
76A	Tube – 3/8” Copper	1	790444
77A	Bushing	1	790450
96A	Pipe Plug – 1/4” Socket	4	790488
96C	Pipe Plug – 3/4” Socket	5	790451

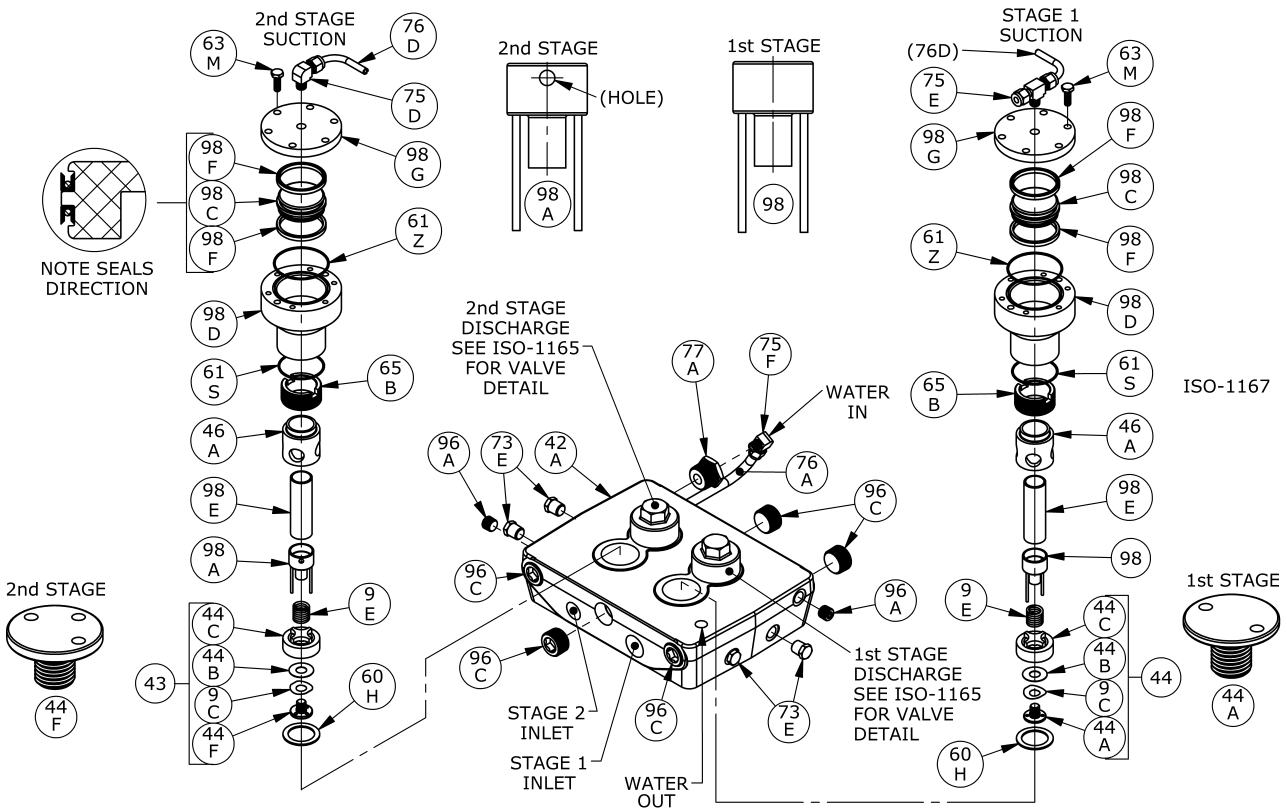

Head Assembly with Unloaders: HDL172C, HDL173C

ISO1167

Ref	Description	Qty	Part No
9C	Valve Spring	4	792038
9E	Unloader Spring	2	793293
42A	Head, water-cooled (HDL) Head TNT-12, water-cooled (HDL)	1	792322 792324
43	Valve Assembly - 2nd Stage	2	792064
44	Valve Assembly - 1st Stage	2	792056
44A	Valve Bumper - 1st Stage	2	792054
44B	Valve Disc	4	792037
44C	Valve Body	4	792055
44F	Valve Bumper - 2nd Stage	2	792066
46	Cage Cage TNT-12	2	792051 792803
46A	Cage	2	792282
49	Valve Cap Valve Cap TNT-12	2	792003 792804
60H	Gasket - Valve *	4	792201
61S	O-Ring (Buna-N) Std * O-Ring (FKM) * O-Ring (PTFE) * O-Ring (Neoprene) * O-Ring (Ethylene Propylene) *	4	792306 792308 792307 792309 792310
61Z	O-Ring (Buna-N) Std * O-Ring (FKM) * O-Ring (PTFE) * O-Ring (Neoprene) * O-Ring (Ethylene Propylene) *	2	792311 792313 792312 792314 792320

Ref	Description	Qty	Part No
63M	Capscrew - Hex Hd	12	797093
65B	Valve Holddown Screw Valve Holddown Screw TNT-12	4	792002 792806
73E	Pipe Plug	3	908198
75D	Tube Elbow	1	790355
75E	Tube Tee	1	790356
75F	Tube Elbow	1	790367
76A	Tube 3/8” Copper	1	790444
76D	Tube	1	790192
77A	Bushing	1	790450
96A	Pipe Plug – ¼” Socket	4	790488
96C	Pipe Plug – 3/4” Socket	5	790451
98	Actuator Assembly - 1st Stage	1	792296
98A	Actuator Assembly - 2nd Stage	1	792295
98C	Unloader Piston	2	793288
98D	Unloader Boby	2	792286
98E	Unloader Plunger	2	793290
98F	Unloader Seal	4	792284
98G	Unloader Cap	2	793287

* Included in Gasket Sets

Suggested Spare Parts for HD173C and HDL173C compressors:

Part #	Description	Qty./ Unit	Comm. Qty.	Spare Qty.
792465 792466 792467 792468 792469	Gasket Set - Buna-N Gasket Set - PTFE * Gasket Set - FKM * Gasket Set - Neoprene * Gasket Set - Ethylene Propylene *	1	1	1
792056	Stage 1 Suction Valve	1		1
792064	Stage 2 Suction Valve	1		
792056	Stage 1 Discharge Valve	1		1
792064	Stage 2 Discharge Valve	1		1
792284	Unloader Seal *	4		4
792420 792421	Stage 1 Piston Ring - Glass/Moly Filled Stage 1 Piston Ring - Poly Filled *	3	3	3
794615	Stage 1 Piston Ring Expander	3	3	3
792407 792408	Stage 2 Piston Ring - Glass/Moly Filled Stage 2 Piston Ring - Poly Filled *	3		3
792409	Stage 2 Piston Ring Expander	3		3
793510	Packing Set	6	6	6
794726	Oil Filter	1		6
792014	Wrist Pin	2		2
792302	Wrist Pin Bearing	2	2	2
792012	Conrod Bearing	2	2	2
The following parts would normally be required only for major compressor overhaul.				
793142	Bearing Cone	2		2
793126	Bearing Cup	2		2
792406	Crosshead Assembly	2		1
792301	Conrod Assembly	2		1
794760	Oil Pump Repair Kit	1		
792157	Crankshaft Assembly	1		
793133	Bearing Adjustment Shim Kit	1		
792457 792878 792321 792323	Cylinder – HD173C Cylinder, TNT-12 PTFE / Nickel Treated – HD173C * Cylinder – HDL173C Cylinder, TNT-12 PTFE / Nickel Treated – HDL173C *	1		

* Optional Equipment on New Compressors

Notes: