BLACKMER PARTS LIST

PUMP MODELS: SNP1.25, SNP1.5

SNPJ1.25*, SNPJ1.5*

Keep with Instructions 104-A00 for Installation, Operation and Maintenance

Section	104
Effective	Nov 2026
Replaces	Mar 2024

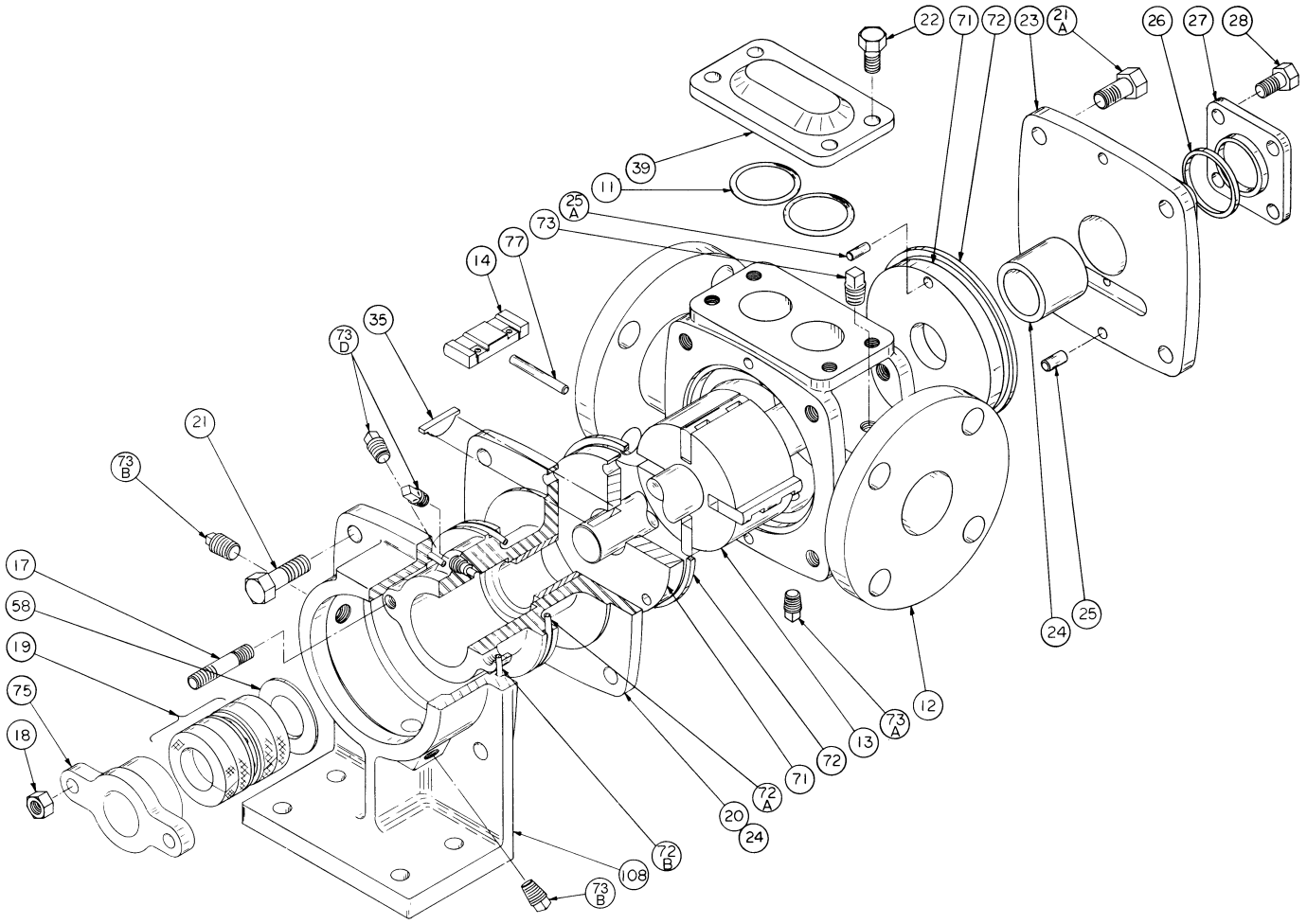

Ref. No.	Description	Parts per Pump	Part No.	Ref. No.	Description	Parts per Pump	Part No.
11	Seal Ring – Blanking Plate	2	[1] 711956	71	Disc	2	[2] 063103
12	Cylinder (1.25" pumps)	1	023101	72	Seal Ring – Head	2	[1] 711955
	Cylinder (1.5" pumps)		023111	72A	O-Ring – Inboard Head (w/ jacket)	1	[1] 711959
13	Rotor & Shaft	1	[2] 263101	72B	O-Ring – Jacket (w/ jacket)	1	[1] 701991
14	Vane – Duravane	4	[1] 093107	73	Gage Plug (1/4")	2	908193
	Vane – EC Laminate		[1] 093112	73A	Drain Plug (1/8")	1	908183
20	Head & Bushing Asy. – Inboard	1	033103	73B	Jacket Plug (1/4")	2	908193
21	Capscrews – Inboard Head	4	920349	73D	Gland Plug (1/8")	3	908183
21A	Capscrews – Outboard Head	4	920293	77	Push Rod (1.25" pumps)	2	[1] 123101
22	Capscrews – Blanking Plate	4	920179		Push Rod (1.5" pumps)		[1] 123111
23	Head & Bushing Asy. – Outboard	1	033104	108	Mounting Bracket / Jacket	1	833101
24	Bushing (Sleeve Bearing)	2	[1] 161201	—	Kit - Maintenance SNP1.25	—	898944
25	Dowel Pin – Head	4	930564	—	Kit - Maintenance SNP1.25 (jacketed)	—	898985
25A	Dowel Pin – Disc	2	930565	—	Kit - Maintenance SNP1.5	—	898945
26	Seal Ring – Bearing Cover	1	[1] 711957	—	Kit - Maintenance SNP1.5 (jacketed)	—	898986
27	Bearing Cover	1	043101	—	Kit - Rebuild SNP1.25	—	899044
28	Capscrews – Bearing Cover	4	920129	—	Kit - Rebuild SNP1.25 (jacketed)	—	899085
35	Key – Shaft	1	[1] 909125	—	Kit - Rebuild SNP1.5	—	899045
39	Plate – Blanking	1	493101	—	Kit - Rebuild SNP1.5 (jacketed)	—	899086

[1] Included in Maintenance and Rebuild Kits (Std. kits include Duravanes; jacketed kits include EC Laminate Vanes).

[2] Included in Rebuild Kit * Effective Jan 2006, jackets are considered an option and no longer change the model number.

SNP1.25 -1.5 – RELIEF VALVE – OPTIONAL

Ref. No.	Part Name	Qty	Part No.
1	Cap – Relief Valve (R/V)	1	413151
2	Adjusting Screw – R/V	1	433101
4	Cover – R/V	1	413101
5	Capscrews – R/V Cover	4	920129
6	Body – R/V	1	403101
7	Spring Guide – R/V	1	423101
8	Spring – R/V (25-50 psi)	1	471417
	Spring – R/V (51-75 psi)		471418
	Spring – R/V (76-100 psi)		471427
	Spring – R/V (101-150 psi)		471429
9	Valve – R/V	1	453101
10	Seal Ring – R/V Cover	1	711958
22	Capscrews – R/V Body	4	920179
29	Plug (1")	0-1	908229
29A	Plug (3/4") (External By-Pass)	0-1	908224
88	Gasket – R/V Cap	1	533101

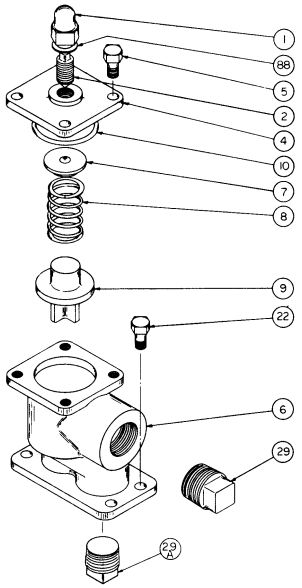

SNP1.25 -1.5 – SHAFT PACKING – STANDARD

Ref. No.	Part Name	Qty	Part No.
17	Stud – Packing Follower	2	921369
18	Locknut – Packing Follower Stud	2	922821
19	Packing Set (5 Rings – Std.)	1	[1] 323102
58	Packing Washer	1	353101
75	Packing Follower	1	143101

[1] Included in Maintenance and Rebuild Kits

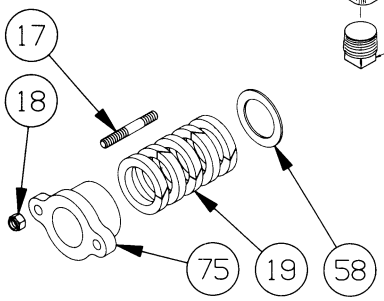

SNP1.25 -1.5 – MECHANICAL SEAL - OPTIONAL

Ref. No.	Part Name	Qty	Part No.
16	Capscrew – Retainer	2	920227
82	Spacer – Seal	1	373102
126	Retainer – Seal	1	333110
153	Mechanical Seal Assembly – Crane Type 9	1	333104

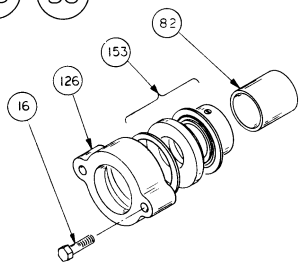

SNP1.25 -1.5 – TRIPLE-LIP CARTRIDGE SEAL - OPTIONAL

Ref. No.	Part Name	Seal	Seal Rebuild Kit
—	**TRIPLE-LIP CARTRIDGE SEAL**	**333114**	**899100**
220	Shaft Sleeve O-Ring	1	X
221	Shaft Sleeve	1	
222	Gasket	1	X
223	Gland Plate Assembly	1	
224	Element O-Ring	1	X
225	Seal Spacer	1	X
226	Seal Element	3	X
227	Flushing Spacer	1	X
228	Flushing Spacer O-Ring	1	X
229	Retaining Ring	1	
230	Snap Ring	1	X
231	Shaft Sleeve Setscrews	6	X
232	Stepped Shaft Sleeve O-Ring	1	X
233	Gland Capscrew	4	
234	Flat Washer	4	

X = Parts included in Seal Rebuild Kit

