BLACKMER TRUCK PUMPS

INSTALLATION OPERATION AND MAINTENANCE INSTRUCTIONS

MODELS: TX, TXD - 1.5, 2A, 2.5A, 3E, 4A

TXDI - 2A, 2.5A, 3A & TXI4A

960280

INSTRUCTIONS NO. 201-A00

Section	201
Effective	Oct 2026
Replaces	Feb 2024

Numbers in parentheses following individual parts indicate reference numbers on Blackmer Parts Lists 201-A01, 201-A02, 201-A03, 201-A04, 201-A05, 201-A06, 201-A07, 201-A08 and 201-A09.

Blackmer pump manuals and parts lists may be obtained from Blackmer's website (www.blackmer.com) or by contacting Blackmer Customer Service.

TABLE OF CONTENTS

Page

PUMP DATA
- Technical Data 2
- Initial Pump Start Up Information 2

INSTALLATION
- Pre-Installation Cleaning 3
- Location and Piping 3
- Truck Mounting 3
- Pump Drive 3
- Pump Rotation 4
- To Change Pump Rotation 4

OPERATION
- Pre-Start Up Check List 5
- Start Up Procedures 5
- Pump Speed 5
- Reverse Rotation 5
- Flushing the Pump 6
- Pump Relief Valve 6
- Relief Valve Setting and Adjustment 6

MAINTENANCE
- Strainers 7
- Lubrication 7
- Vane Replacement 8
- Pump Disassembly 8
- Pump Assembly 9

TROUBLE SHOOTING 11

SAFETY DATA

This is a SAFETY ALERT SYMBOL.
When you see this symbol on the product, or in the manual, look for one of the following signal words and be alert to the potential for personal injury, death or major property damage

DANGER

Warns of hazards that WILL cause serious personal injury, death or major property damage.

WARNING

Warns of hazards that CAN cause serious personal injury, death or major property damage.

CAUTION

Warns of hazards that CAN cause personal injury or property damage.

NOTICE:
Indicates special instructions which are very important and must be followed.

NOTICE:

Blackmer Truck Pumps **MUST** only be installed in systems, which have been designed by qualified engineering personnel. The system **MUST** conform to all applicable local and national regulations and safety standards.

This manual is intended to assist in the installation and operation of the Blackmer truck pumps, and **MUST** be kept with the pump.

Pump service shall be performed by qualified technicians **ONLY**. Service shall conform to all applicable local and national regulations and safety standards.

Thoroughly review this manual, all instructions and hazard warnings, **BEFORE** performing any work on the pump.

Maintain **ALL** system and pump operation and hazard warning decals.

SAFETY DATA

WARNING

Hazardous pressure can cause personal injury or property damage

Failure to set the vehicle emergency brake and chock wheels before performing service can cause severe personal injury or property damage.

WARNING

Hazardous pressure can cause personal injury or property damage

Disconnecting fluid or pressure containment components during pump operation can cause serious personal injury, death or major property damage

WARNING

Hazardous pressure can cause personal injury or property damage

Failure to relieve system pressure prior to performing pump service or maintenance can cause personal injury or property damage.

WARNING

Hazardous or toxic fluids can cause serious injury.

If pumping hazardous or toxic fluids, system must be flushed prior to performing service

WARNING

Hazardous machinery can cause serious personal injury.

Failure to disconnect and lockout electrical power or engine drive before attempting maintenance can cause severe personal injury or death

WARNING

Do not operate without guard in place

Operation without guards in place can cause serious personal injury, major property damage, or death.

PUMP DATA

PUMP IDENTIFICATION

A pump Identification tag, containing the pump serial number, I.D. number, and model designation, is attached to each pump. It is recommended that the data from this tag be recorded and filed for future reference. If replacement parts are needed, or if information pertaining to the pump is required, this data must be furnished to a Blackmer representative.

TECHNICAL DATA

	TX (D) Models
Maximum Operating Temperature *	240 – 300°F (115 – 149°C)
Maximum Speed size 1.5, 2, 2.5 size 3 size 4	 780 RPM 640 RPM 500 RPM
Maximum Viscosity	20,000 SSU (4,250 cSt)
Maximum Differential Pressure	125 psi (8.6 Bar)
Maximum Working Pressure	175 psi (12.1 Bar)

* Maximum operating limits are dependent on the materials of construction. See Blackmer Material Specs 201-091.

INITIAL PUMP START UP INFORMATION

Model No.: _____

Serial No.: _____

Date of Installation: _____

Pressure Gauge Reading: _____

Vacuum Gauge Reading: _____

Flow Rate: _____

INSTALLATION

NOTICE:

Blackmer truck pumps must only be installed in systems designed by qualified engineering personnel. System design must conform with all applicable regulations and codes and provide warning of all system hazards.

PRE-INSTALLATION CLEANING

NOTICE:

New pumps contain residual test fluid and rust inhibitor. If necessary, flush pump prior to use.

Foreign matter entering the pump WILL cause extensive damage. The supply tank and piping MUST be cleaned and flushed prior to pump installation and operation.

LOCATION AND PIPING

An improperly designed piping system or unit installation WILL significantly reduce pump performance and life. The following are piping system guidelines for pump installation.

1. To minimize intake losses, locate the pump as close as possible to the source of supply.
2. Piping MUST be properly supported to prevent any piping loads from being placed on the pump.
3. Intake piping and fittings MUST be at least as large in diameter as the pump intake connection.
4. Minimize the number of intake line fittings (valves, elbows, etc.) and piping turns or bends.
5. Install vacuum and pressure gauges in the ¼" NPT ports located on the pump cylinder near the intake and discharge flanges to check pump at start-up
6. Install a strainer in the inlet line to protect the pump from foreign matter. Place the intake strainer to allow frequent cleaning.
7. Intake and discharge piping MUST be free of all leaks.

TRUCK MOUNTING

The pump will operate satisfactorily in any position. Consult Blackmer factory for vertical shaft mounts. The pump can be bolted to the truck frame or on a saddle hung below the frame, and MUST be adequately supported. Mounting the pump with the cylinder feet down, or with the intake port up, is recommended for thorough draining of the pump.

PUMP DRIVE

The pump may be driven by a power take-off through universal joints. When using universal joints, a splined slip joint, properly lubricated, must be used on the connecting jackshaft to prevent end thrust on the pump shaft.

It is very important to install a proper drive line to avoid excessive wear, vibration and noise see Fig. 2 and Table 1.

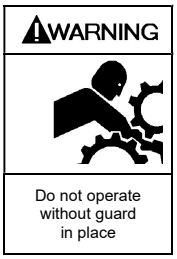

A drive shaft guard between the PTO and pump must be provided to prevent personal injury, property damage, or death.

Note: A Drive Shaft Guard Between the Pump and PTO Must Be Provided (Not Shown)

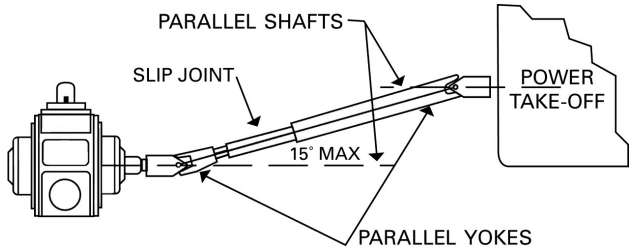

Figure 2 Pump Drive

Angle of Drive Shaft		
1º through 5º	6º through 10º	11º through 15º
Very Good	Good	Fair

Table 1

General guidelines to follow for proper pump drive:

1. DO NOT use Square slip joints.
2. Use the least number of jackshafts as is practical.
3. Use an even number of universal joints.
4. The pump shaft and power take-off shaft must be parallel in all respects. Use an angular level measuring device to ensure the PTO and pump shaft are parallel to each other. If necessary, the pump can be shimmed to correct any misalignment. The PTO shaft coming off at the transmission does not need to be perfectly horizontal as long as the pump is shimmed to have its shaft parallel in all respects to the PTO shaft.
5. The yokes of the universals at both ends of the jackshaft must be parallel and in phase.
6. The maximum angle between the jackshaft and the pump shaft is 15 degrees. Refer to Table 1.

Failure to follow any of these guidelines may result in a gallop or uneven turning of the pump rotor, which will in turn cause a surging vibration to the liquid stream and piping system. Contact the supplier of the drive line components for specific design assistance.

Hydraulic Drive

Pump sizes 1.5” – 4” may also be driven hydraulically. Hydraulic motors need to be well supported with their shafts parallel to the pump shaft in all respects. Blackmer provides an optional close-coupled hydraulic motor adapter. The adapter provides for straight alignment of a hydraulic motor drive through a solid coupling connected to a straight key shaft. This coupling connection requires grease lubrication every three months at **minimum**. Refer to the "Lubrication" section of this manual.

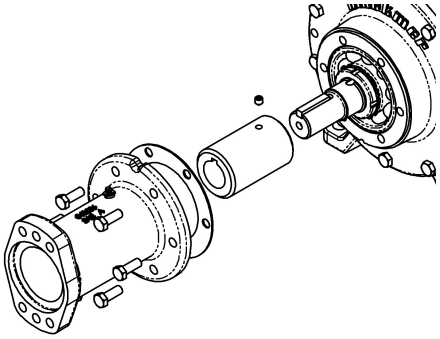

Figure 3 Hydraulic Drive

PUMP ROTATION

NOTICE:

Confirm correct pump rotation by checking the pump rotation arrows respective to pump driver rotation.

TO CHANGE PUMP ROTATION

TXD Models

The TXD pump models are equipped with a double ended rotor and shaft, enabling them to be driven from either shaft end. To change rotation, rotate the pump 180 degrees so that the opposite shaft becomes the driven shaft. On TXD pump models, the shaft protector (186) MUST be mounted over the non-driven shaft end.

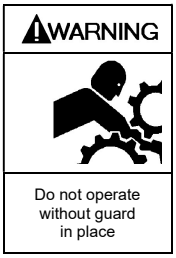

Operation without shaft protector can cause serious personal injury, major property damage, or death.

TX1.5, TX4 Models

To reverse rotation, the pump must be disassembled then reassembled with the shaft on the opposite side of the pump. See the ‘Maintenance’ section for instructions.

OPERATION

⚠CAUTION

Hazardous pressure can cause personal injury or property damage

Pumps operating against a closed valve can cause system failure, personal injury and property damage

⚠WARNING

Hazardous pressure can cause personal injury or property damage

Disconnecting fluid or pressure containment components during pump operation can cause serious personal injury, death or major property damage

⚠WARNING

Hazardous or toxic fluids can cause serious injury.

If pumping hazardous or toxic fluids, system must be flushed prior to performing service

⚠WARNING

Hazardous pressure can cause personal injury or property damage

Failure to relieve system pressure prior to performing pump service or maintenance can cause personal injury or property damage.

PRE-START UP CHECK LIST

1. Check the alignment of the pipes to the pump. Pipes must be supported so that they do not spring away or drop down when the pump flanges or union joints are disconnected.
2. Install vacuum and pressure gauges in the ¼" NPT ports located on the pump cylinder near the intake and discharge flanges. These can be used to check the actual suction and discharge conditions after pump start-up.
3. Inspect complete piping system to ensure that no piping loads are being placed on the pump.
4. Secure appropriate hose connections.

START UP PROCEDURES

NOTICE:

Consult the "General Pump Troubleshooting" section of this manual if difficulties during start up are experienced.

1. Ensure that appropriate valves are open in the inlet and discharge lines.
2. Start the pump. Priming should occur within one minute.
3. Check the vacuum and pressure gauges to ensure the system is operating within expected parameters. Record the gauge readings in the "Initial Start Up Information" section of this manual for future reference.
4. Inspect piping, fittings, and associated system equipment for leaks, noise, vibration and overheating.
5. Check the flow rate to ensure the pump is operating within the expected parameters.
6. Check the pressure setting of the relief valve by momentarily closing a valve in the discharge line and reading the pressure gauge. This pressure needs to be 15 -20 psi (1.0 - 1.4 Bar) higher than the maximum system operating pressure or the external bypass valve setting (if equipped). **DO NOT operate the pump against a closed discharge valve for more than 15 seconds.** If adjustments need to be made, refer to the "Relief Valve Setting and Adjustment" section of this manual.

PUMP SPEED

PTO and hydraulically driven units MUST contain speed control devices to prevent pump speeds above the maximum RPM specifications, regardless of the truck engine unloading speeds. If fluid delivery is less than expected, see the "General Pump Troubleshooting" section

REVERSE ROTATION

NOTICE:

When pumps are operated in reverse a separate pressure relief valve must be installed to protect the pump from excessive pressure.

It may be desirable to run the pump in reverse rotation for system maintenance. The pump will operate satisfactorily in reverse rotation for a LIMITED time, at a reduced performance level.

OPERATION

FLUSHING THE PUMP

NOTICE:

If flushing fluid is to be left in the pump for an extended time, it must be a lubricating, non-corrosive fluid. If a corrosive, non-lubricating fluid is used, it must be flushed from the pump immediately.

To flush the pump, use the following procedure:

1. Allow the pump to evacuate as much fluid as possible.
2. Run cleaning fluid through the pump intake. The cleaning fluid should be compatible with the pump O-rings and vane material. When handling "sticky" fluids that solidify within the pump (i.e., waxes, adhesives, resins, asphalts, etc.), use a fluid that will prevent solidification of the fluid being transferred and facilitate flushing.
3. Operate the pump against a closed discharge for 15 seconds to allow the cleaning fluid to recirculate through the internal relief valve.

NOTICE:

After flushing the pump some residual fluid will remain in the pump and piping.

NOTICE:

Properly dispose of all waste fluids in accordance with the appropriate codes and regulations.

RELIEF VALVE

NOTICE:

The pump internal relief valve is designed to protect the pump from excessive pressure and must not be used as a system pressure control valve.

Pumping volatile liquids under suction lift may cause cavitation. DO NOT partially close the discharge valve. This WILL result in internal relief valve chatter. For these applications, install an external bypass valve, and any necessary piping, back to the storage tank. Use a bypass system when operating for extended periods (more than 1 minute) against a closed discharge valve.

WARNING

Hazardous Machinery can cause severe personal injury or death

Failure to disengage PTO before adjusting pump relief valve can cause severe personal injury or death

CAUTION

Hazardous pressure can cause personal injury or property damage

Incorrect settings of the pressure relief valve can cause pump component failure, personal injury, and property damage.

RELIEF VALVE SETTING AND ADJUSTMENT

WARNING

Hazardous or toxic fluids can cause serious injury.

Relief valve cap is exposed to pumpage and will contain some fluid

NOTICE:

If the pump is equipped with a Blackmer air valve, refer to setting and adjustment procedures in Blackmer Air Valve Instructions and Parts List No. 201-G00 (Piston Air Valve), or 201-F00 (Diaphragm Air Valve).

The relief valve pressure setting is marked on a metal tag attached to the valve cover. Generally, the relief valve should be set at least 15 - 20 psi (1.0 - 1.4 Bar) higher than the operating pressure, or the external bypass valve setting (if equipped).

DO NOT remove the R /V Cap OR adjust the relief valve pressure setting while the pump is in operation.

1. **To INCREASE the pressure setting,** remove the relief valve cap, loosen the locknut, and turn the adjusting screw *inwar*d, or clockwise. Retighten the locknut and replace the valve cap.
2. **To DECREASE the pressure settin**g, remove the relief valve cap, loosen the locknut, and turn the adjusting screw *outwar*d, or counterclockwise. Retighten the locknut and replace the valve cap.

Refer to the individual Blackmer pump parts lists for spring pressure ranges. The pumps are supplied from the factory with the relief valve adjusted to the mid-point of the spring range, unless specified differently.

NOTICE:

Where regulations require, holes in R/V cap (1) and capscrew with hole (5C) are used by the weights and measures official(s) to apply a security seal or tag.

MAINTENANCE

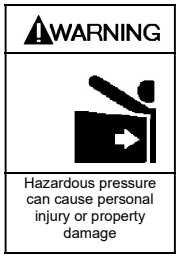

Failure to set the vehicle emergency brake and chock wheels before performing service can cause severe personal injury or property damage.

Disconnecting fluid or pressure containment components during pump operation can cause serious personal injury, death or major property damage

Failure to relieve system pressure prior to performing pump service or maintenance can cause personal injury or property damage.

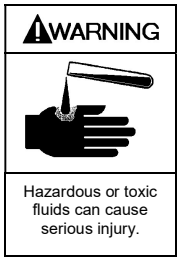

If pumping hazardous or toxic fluids, system must be flushed prior to performing service

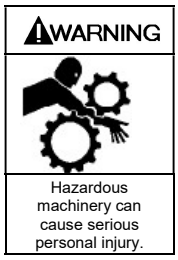

Failure to disconnect and lockout electrical power or engine drive before attempting maintenance can cause severe personal injury or death

Operation without guards in place can cause serious personal injury, major property damage, or death.

NOTICE:
Maintenance shall be performed by qualified technicians only, following the appropriate procedures and warnings as presented in this manual.

STRAINERS

Strainers must be cleaned regularly to avoid pump starvation. Schedule will depend upon the application and conditions.

LUBRICATION

NOTICE:

To avoid possible entanglement in moving parts do not lubricate pump bearings, hydraulic adapter coupling or any other parts while the pump is running.

NOTICE:

If pumps are repainted in the field, ensure that the grease relief fittings (76A) are functioning properly after painting. Do NOT paint them closed. Remove any excess paint from the fittings.

Lubricate the ball bearings, and hydraulic motor couplings (if equipped), every three months at a minimum.

Recommended Grease:
Mobil® - Mobilgrease XHP222,
Exxon® - RONNEX MP Grease, or equivalent.

Manual Greasing Procedure:

1. Remove the grease relief fittings (76A) from the bearing covers (27A) or hydraulic motor adapter (135).
2. Apply grease with a hand gun until grease begins to escape from the grease relief fitting port.
3. Replace the grease relief fittings (76A).

DO NOT overgrease pump bearings. While it is normal for some grease to escape from the grease tell-tale hole after lubrication, excessive grease on pumps equipped with mechanical seals can cause seal failure.

Auto Greasing Systems:
If end users choose to install/use auto greasing systems on their trucks, that system MUST be adjusted to match the pump requirements. Over-greasing will cause seal failure – under-greasing will cause bearing failure.

MAINTENANCE

VANE REPLACEMENT

NOTICE:

Maintenance shall be performed by qualified technicians only, following the appropriate procedures and warnings as presented in manual.

1. Remove the head assembly from the **outboard** (non-driven) side of the pump according to steps 2 - 6 in the "Pump Disassembly" section of this manual.
2. Turn the shaft by hand until a vane comes to the top (12 o'clock) position of the rotor. Remove the vane.
3. Install a new vane, ensuring that the rounded edge is UP, and the relief grooves are facing towards the direction of rotation. See Figure 4.
4. Repeat steps 2 and 3 until all vanes have been replaced.
5. Reassemble the pump according to steps 2 - 7 and 12 - 17 of the "Pump Assembly." section of this manual.

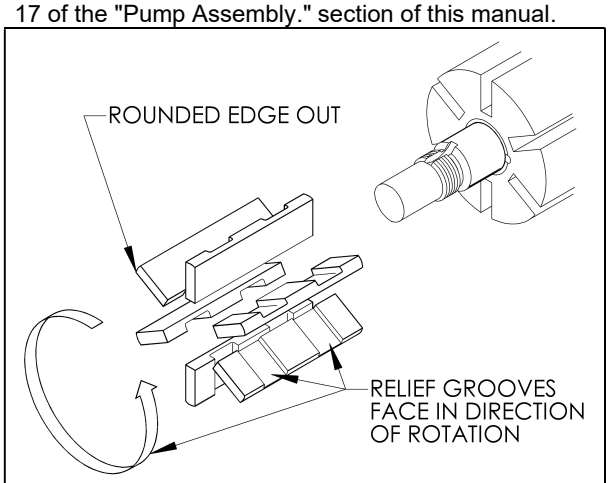

Figure 4
1.5 and 2-inch models have four (4) vanes.

PUMP DISASSEMBLY

NOTICE:

Follow all hazard warnings and instructions provided in the "Maintenance" section of this manual.

1. Starting on the **inboard** (driven) end of the pump, clean the pump shaft thoroughly, making sure the shaft is free of nicks and burrs. This will prevent damage to the mechanical seal when the inboard head assembly is removed.
2. Remove the inboard bearing cover capscrews (28) and slide the inboard bearing cover (27A) and gasket (26) off the shaft. Discard the bearing cover gasket. On the 1.5, 2, and 2.5 inch pump models, the dirt shield (123A) will come off with the bearing cover.
3. Remove the outboard bearing cover capscrews (28) and slide the outboard bearing cover (27A) and gasket (26) off the shaft. Discard the bearing cover gasket.
4. If equipped with locknuts and lockwashers (24A, 24B):
   a. Bend up the engaged lockwasher tang and rotate the locknut counterclockwise to remove it from the shaft.
   b. Slide the lockwasher off the shaft. Inspect the lockwasher for damage and replace as required.
   c. Repeat steps a and b on the opposite shaft end.
5. The TX4-inch pump model is equipped with bearing lock collars (24A). To remove:
   a. Remove the jam nuts (24C) and loosen the two set screws (24B).
   b. Slide the lock collar off the shaft.
   c. Repeat steps a and b on the opposite shaft end.
6. Remove the head capscrews (21) and carefully pry the head (20) away from the cylinder.
7. Slide the head off the shaft. The head O-ring (72), bearing (24), and mechanical seal (153) will come off with the head assembly. Remove and discard the head O-ring.
   a. Pull the bearing (24) from the housing in the head.
   b. To remove the **mechanical seal** (153), use two screw drivers to gently push the backside of the seal jacket to push the seal from the head (see Figure 5). Use care when placing the screwdrivers to prevent damage to the seal faces. Remove and discard mechanical seal O-rings.

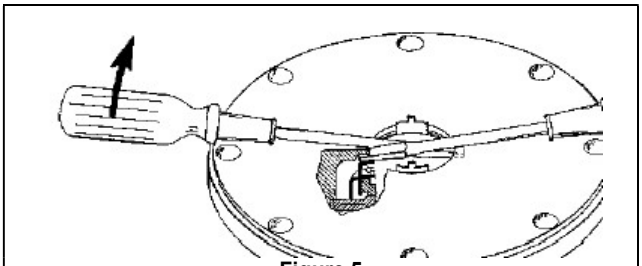

Figure 5

8. Pull the rotor and shaft (13) from the cylinder (12). While one hand is pulling the shaft, the other hand should be cupped underneath the rotor to prevent the vanes (14) and push rods (77) from falling out. Carefully set the rotor and shaft, vanes and push rods aside for future vane replacement and reassembly.
9. Remove the remaining components from the outboard side of the pump, as instructed in steps 6 and 7 above.

PUMP ASSEMBLY

Before reassembling the pump, inspect all component parts for wear or damage, and replace as required. Wash out the bearing/seal recess of the head and remove any burrs or nicks from the rotor and shaft.

1. **Reassemble the OUTBOARD side of the pump first:**
   a. For a CLOCKWISE rotation pump, position the pump cylinder with the INTAKE port to the **left**.
   b. For a COUNTERCLOCKWISE rotation pump, position the pump cylinder with the INTAKE port to the **right**.
2. Install a new head O-ring (72) in the groove in the head. Lightly grease the outside circumference of the O-ring to facilitate head installation. Start in on one side of the groove, stretching ahead with the fingers. See Figure 6.

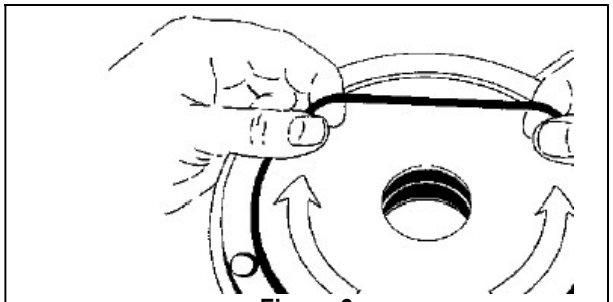

Figure 6

3. Install the head (20) on the outboard side of the cylinder. Install and uniformly tighten four head capscrews (21) 90° apart, torquing to 25 lbs. ft (34 Nm).
4. **MECHANICAL SEAL**
   Apply a small amount of motor oil in the head recess. Push the mechanical seal assembly (153) into the recess of the head with seal jacket drive tangs inward. The pin in the stationary seat must be between the lugs in the back of the head recess.
5. Hand pack the ball bearing (24) with grease. Refer to the "Lubrication" section for the recommended grease.
6. Install the bearing into the head recess. The bearing balls should face outward, with the grease shield inward. Ensure the bearing is fully and squarely seated against the mechanical seal.
7. Turn the pump cylinder around and begin assembly on the opposite, inboard end.
8. Inspect the vanes (14) and push rods (77) for wear and damage, and replace as follows:
   a. Partially install the non-driven end of the rotor and shaft (13) into the open side of the pump cylinder.
   b. Leave part of the rotor outside of the cylinder so that the bottom vanes can be installed and held in place as the push rods are installed in the push rod holes of the rotor. Insert the new vanes into the rotor slots with the rounded edges outward, and the vane relief grooves facing TOWARDS the direction of rotation. See Figure 4.
   c. After the bottom vanes (14) and push rods (77) are installed, insert the rotor and shaft (13) fully into the cylinder (12).
   d. Install the remaining vanes into the top positions of the rotor. **Rotate the shaft by hand to engage the drive tangs of the seal jacket in the rotor slots.**
9. Install the inboard head (20), mechanical seal, and bearing as instructed in steps 2 through 7. Apply a thin coating of motor oil on the inboard shaft to aid installation.
10. Rotate the shaft by hand to engage the mechanical seal drive tangs, and to test for binding or tight spots. If the rotor does not turn freely, lightly tap the rims of the heads with a soft faced mallet until the correct position is found. Install all of the remaining head capscrews for each head and uniformly torque to 25 lbs. ft (34 Nm).
11. **LOCKNUT INSTALLATION (if equipped)**
    The bearing locknuts (24A) and lockwashers (24B) MUST be installed and adjusted properly. Overtightening locknuts can cause bearing failure or a broken lockwasher tang. Loose locknuts will allow the rotor to shift against the heads, causing wear. See Figure 7.
    a. On both ends of the pump shaft, Install a lockwasher (24B) with the tangs facing outward, followed by a locknut (24A) with the tapered end inward. Ensure the inner tang "A" of the lockwasher is located in the slot in the shaft threads, bending it slightly, if necessary.
    b. Tighten both locknuts (24A) to ensure that the bearings (24) are bottomed in the head recess. DO NOT overtighten and bend or shear the lockwasher inner tang.
    c. Loosen both locknuts one complete turn.
    d. Tighten one locknut until a slight rotor drag is felt when turning the shaft by hand.
    e. Back off the nut the width of one lockwasher tang "B". Secure the nut by bending the closest aligned lockwasher tang into the slot in the locknut. The pump should turn freely when rotated by hand.
    f. Tighten the opposite locknut by hand until it is snug against the bearing. Then, using a spanner wrench, tighten the nut the width of one lockwasher tang. Tighten just past the desired tang, then back off the nut to align the tang with the locknut slot. Secure the nut by bending the aligned lockwasher tang into the slot in the locknut. The pump should continue to turn freely when rotated by hand.
    g. To check adjustment, grasp the nut and washer with fingers and rotate back and forth. If this cannot be done, one or both locknuts are too tight and should be alternately loosened one stop at a time (.001") (25 microns). Begin by loosening the locknut adjusted last.

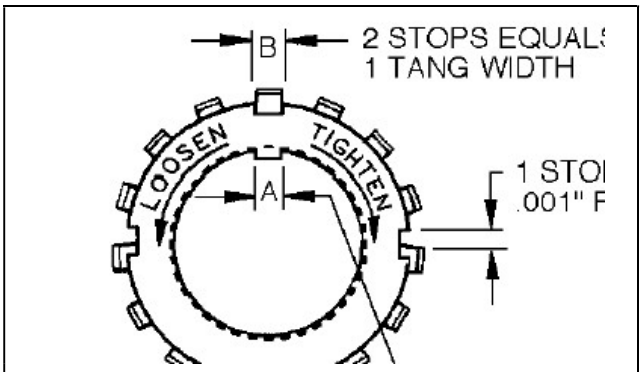

Figure 7 Locknut Adjustment

12. **LOCK COLLAR INSTALLATION – TX4 Models**

It is important that the bearing Lock Collar (24A) be installed and adjusted properly. Overtightening the Lock Collar Adjustment Tool Screws during installation can cause bearing failure or excessive pump power draw. Loose Lock Collar Adjustment Tool Screws will allow the rotor to shift against the heads, causing wear.

a. On both ends of the pump shaft, install a Lock Collar (24A) with the socket head cap screws facing upward.

b. Starting with the Outboard side of the pump, attach the Lock Collar Adjustment Tool to the Outboard Head (23). See Figure 7. Align the inner hole pattern of the tool with the corresponding tapped holes in the head. Ensure that the large center hole of the tool is centered on the shaft.

c. Slowly turn the Lock Collar Adjustment Tool screws, which will move the Lock Collar and Bearing towards the Outboard Head (23). Alternate between each screw so that even pressure is applied to the Lock Collar. Once the Bearing (24) stops moving into the head, is slightly recessed in the head bore, and the force required to turn the screws increases stop turning the screws.

d. Tighten 5/16” screws on lock collar to 20 ft-lbf. Make sure that the 3/8” set screws are loosened, so they do not contact the shaft. Ensure an even gap on each split of the collar.

e. Remove Lock Collar Adjustment Tool.

f. Tighten 3/8” set screws on Lock Collar to 20 ft-lbf.

g. Move Lock Collar Adjustment Tool to Inboard side and repeat steps 12a through 12f. See figure 7 for Inboard Side tool assembly.

h. Spin shaft to make sure it turns smoothly.

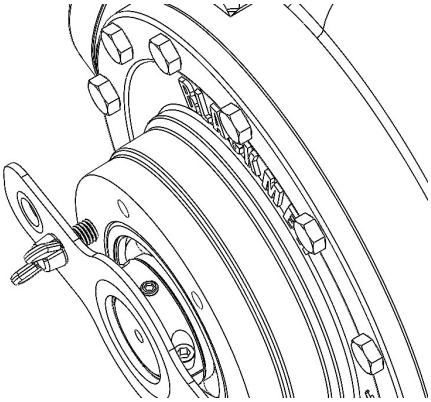

Figure 7 – Lock Collar Assembly

13. Inspect the grease seal (104) for wear or damage and replace as required. Grease the outside diameter of the grease seal and push it into the bearing cover (27 or 27A) with the lip of the seal inward. The lip will face outward when the bearing cover is installed on the head

14. Attach a new bearing cover gasket (26) and the bearing cover to the head. Install and torque the bearing cover capscrews (28) to 15 lbs. ft (20 Nm).

15. Follow steps 14 and 15 to install the grease seal and bearing cover (27 or 27A) on the opposite side of the pump.

16. On 1.5, 2 and 2.5-inch pump models, push the dirt shield (123A) over the inboard shaft and firmly against the bearing cover (27).

17. On TXD models, attach the shaft protector (186) on the non-driven shaft end.

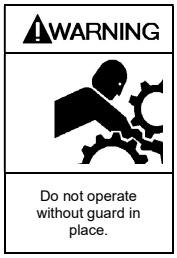

Operation without shaft protector can cause serious personal injury, major property damage, or death.

18. **RELIEF VALVE ASSEMBLY**

If the pump is equipped with a Blackmer air valve, refer to setting and adjustment procedures in Blackmer Air Valve Instructions and Parts List No. 201-F00, or 201B-B00.

a. Insert the valve (9) into the relief valve bore of the cylinder with the fluted end inward.

b. Install the relief valve spring (8) and spring guide (7) against the valve.

c. Attach a new relief valve gasket (10) and the valve cover (4) on the cylinder.

d. Screw the relief valve adjusting screw (2) into the valve cover until it makes contact with the spring guide (7).

NOTICE:

The relief valve setting MUST be tested and adjusted more precisely before putting the pump into service. Refer to "Relief Valve Setting and Adjustment"

e. Install the relief valve cap (1) and gasket (88) after the relief valve has been precisely adjusted.

TROUBLESHOOTING

NOTICE:
Maintenance shall be performed by qualified technicians only, following the appropriate procedures and warnings as presented in this manual.

SYMPTOM	PROBABLE CAUSE
Pump Not Priming	1. Pump not wetted. 2. Worn vanes. 3. Suction valve closed. 4. Air leaks in the suction line. 5. Strainer clogged. 6. Suction line or valves clogged or too restrictive. 7. Broken drive train. 8. Pump vapor-locked. 9. Pump speed too low for priming. 10. Relief valve partially open, worn or not seating properly. 11. Vanes installed incorrectly (see "Vane Replacement").

TROUBLESHOOTING continued

Reduced Capacity	1. Pump speed too low. 2. Suction valves not fully open. 3. Air leaks in the suction line. 4. Excessive restriction in the suction line (i.e.: undersized piping, too many elbows & fittings, clogged strainer, etc.). 5. Damaged or worn parts. 6. Excessive restriction in discharge line causing partial flow through the relief valve. 7. Relief Valve worn, set too low, or not seating properly. 8. Vanes installed incorrectly (see "Vane Replacement").
Noise	1. Excessive vacuum on the pump due to: a. Undersized or restricted fittings in the suction line. b. Pump speed too fast for the viscosity or volatility of the liquid. c. Pump too far from fluid source. 2. Running the pump for extended periods with a closed discharge line. 3. Pump not securely mounted. 4. Improper drive line (see "Pump Drive"). 5. Bearings worn or damaged. 6. Vibration from improperly anchored piping. 7. Bent shaft, or drive coupling misaligned. 8. Excessively worn rotor. 9. Malfunctioning valve in the system. 10. Relief valve setting too low. 11. Damaged vanes (see following category).
Damaged Vanes	1. Foreign objects entering the pump. 2. Running the pump dry for extended periods of time. 3. Cavitation. 4. Viscosity too high for the vanes and /or the pump speed. 5. Incompatibility with the liquids pumped. 6. Excessive heat. 7. Worn or bent push rods, or worn push rod holes. 8. Settled or solidified material in the pump at start-up. 9. Hydraulic hammer - pressure spikes. 10. Vanes installed incorrectly (see"Vane Replacement").
Broken Shaft	1. Foreign objects entering the pump. 2. Viscosity too high for the pump speed. 3. Relief valve not opening. 4. Hydraulic hammer - pressure spikes. 5. Pump/driver misalignment. 6. Excessively worn vanes or vane slots. 7. Settled or solidified material in the pump at start-up.
Mechanical Seal Leakage	1. O-rings not compatible with the liquids pumped. 2. O-rings nicked, cut or twisted. 3. Shaft at seal area damaged, worn or dirty. 4. Ball bearings overgreased. 5. Excessive cavitation. 6. Mechanical seal faces cracked, scratched, pitted or dirty.

1809 Century Avenue, Grand Rapids, Michigan 49503-1530 U.S.A.
Telephone: (616) 241-1611 • Fax: (616) 241-3752
E-mail: blackmer @blackmer.com • Internet Address: www .blackmer.com