BLACKMER POWER PUMPS

INSTALLATION OPERATION AND MAINTENANCE INSTRUCTIONS

MODEL: SX3A

962203
INSTRUCTIONS NO. 104-B00

Section	104
Effective	Oct 2026
Replaces	Jan 2014

TABLE OF CONTENTS Page

PUMP DATA
- Technical Data 2
- Initial Pump Start Up Information 2

INSTALLATION
- Pre-Installation Cleaning 3
- Location and Piping 3
- Pump Mounting 3
- Coupling Alignment 4
- Pump Rotation 4
- To Change Pump Rotation 4
- Check Valves 4

OPERATION
- Pre-Start Up Check List 5
- Start Up Procedures 5
- Running the Pump in Reverse Rotation 6
- Flushing the Pump 6
- Pump Relief Valve 6
- Relief Valve Setting and Adjustment 6

MAINTENANCE
- Strainers 7
- Lubrication 7
- Vane Replacement 7
- Pump Disassembly 8
- Parts Replacement 8
- Pump Assembly 8

TROUBLE SHOOTING 10

NOTE: Numbers in parentheses following individual parts indicate reference numbers on Blackmer Parts List No. 104-B02.

SAFETY DATA

This is a SAFETY ALERT SYMBOL.
When you see this symbol on the product, or in the manual, look for one of the following signal words and be alert to the potential for personal injury, death or major property damage

DANGER

Warns of hazards that WILL cause serious personal injury, death or major property damage.

WARNING

Warns of hazards that CAN cause serious personal injury, death or major property damage.

CAUTION

Warns of hazards that CAN cause personal injury or property damage.

NOTICE:
Indicates special instructions which are very important and must be followed.

NOTICE:

Blackmer Pumps **MUST** only be installed in systems, which have been designed by qualified engineering personnel. The system **MUST** conform to all applicable local and national regulations and safety standards.

This manual is intended to assist in the installation and operation of the Blackmer SX Series pumps, and **MUST** be kept with the pump.

Pump service shall be performed by qualified technicians **ONLY**. Service shall conform to all applicable local and national regulations and safety standards.

Thoroughly review this manual, all instructions and hazard warnings, **BEFORE** performing any work on the pump.

Maintain **ALL** system and pump operation and hazard warning decals.

Blackmer pump manuals and parts lists may be obtained from Blackmer's website (www.blackmer.com) or by contacting Blackmer Customer Service.

SAFETY DATA

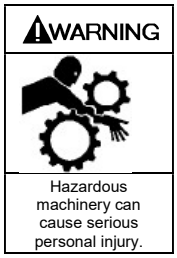

Failure to disconnect and lockout electrical power or engine drive before attempting maintenance can cause severe personal injury or death

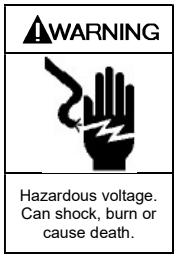

Failure to disconnect and lockout electrical power before attempting maintenance can cause shock, burns or death

If pumping hazardous or toxic fluids, system must be flushed and decontaminated, inside and out, prior to performing service or maintenance

Disconnecting fluid or pressure containment components during pump operation can cause serious personal injury, death or major property damage

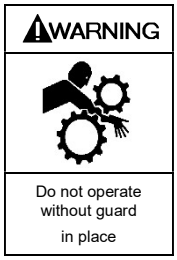

Operation without guards in place can cause serious personal injury, major property damage, or death.

Failure to relieve system pressure prior to performing pump service or maintenance can cause personal injury or property damage.

PUMP DATA

PUMP IDENTIFICATION

A pump Identification tag, containing the pump serial number, I.D. number, and model designation, is attached to each pump. It is recommended that the data from this tag be recorded and filed for future reference. If replacement parts are needed, or if information pertaining to the pump is required, this data must be furnished to a Blackmer representative.

TECHNICAL DATA *

	SX3A
Maximum Pump Speed	**800 RPM**
Maximum Operating Temperature	**240°F (115°C)**
Maximum Viscosity	**20,000 SSU (4,250 cSt)**
Maximum Differential Pressure	**125 psi (8.6 Bar)**
Maximum Working Pressure	**175 psi (12.1 Bar)**

* Technical Data is for standard materials of construction. Consult Blackmer Material Specs for optional materials of construction.

INITIAL PUMP START UP INFORMATION

Model No.: _____

Serial No.: _____

ID No.: _____

Date of Installation: _____

Inlet Gauge Reading: _____

Discharge Gauge Reading: _____

Flow Rate: _____

INSTALLATION

NOTICE:

Blackmer pumps must only be installed in systems designed by qualified engineering personnel. System design must conform with all applicable regulations and codes and provide warning of all system hazards.

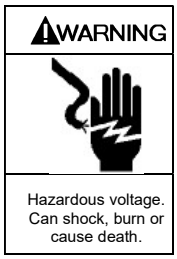

- **Install, ground and wire to local and National Electrical Code requirements.**
- **Install an all-leg disconnect switch near the unit motor.**
- **Disconnect and lockout electrical power before installation or service**
- **Electrical supply MUST match motor nameplate specifications.**
- **Motors equipped with thermal protection automatically disconnect motor electrical circuit when overload exists. Motor can start unexpectedly and without warning.**

PRE-INSTALLATION CLEANING

NOTICE:

New pumps contain residual test fluid and rust inhibitor. If necessary, flush pump prior to use.

Foreign matter entering the pump WILL cause extensive damage. The supply tank and intake piping MUST be cleaned and flushed prior to pump installation and operation.

LOCATION AND PIPING

Pump life and performance can be significantly reduced when installed in an improperly designed system. Before starting the layout and installation of the piping system, review the following suggestions:

1. Locate the pump as near as possible to the source of supply to avoid excessive inlet pipe friction.
2. The inlet line must be at least as large as the intake port on the pump. Slope the piping downward to the pump, without any upward loops. Eliminate restrictions such as sharp bends; globe valves, unnecessary elbows, and undersized strainers.
3. Install a system bypass valve that returns excess flow to the supply tank or pump inlet piping as appropriate for the pumping system. Insure that the bypass valve pressure setting is appropriate for the pump and system component working pressures.
4. It is recommended a strainer be installed in the inlet line to protect the pump from foreign matter. Locate the strainer at least 24" (0.6m) from the pump, and have a net open area of at least four times the area of the intake piping. Strainers must be cleaned regularly to avoid pump starvation.
5. The intake system must be free of air leaks.
6. Expansion joints, placed at least 36" (0.9m) from the pump, will compensate for expansion and contraction of the pipes. Contact the flexible connector/hose manufacturer for required maintenance/care and design assistance in their use.
7. Install pressure gauges in the 1/4” BSPP ports provided in the pump casing to check pump at start up.
8. ALL piping and fittings MUST be properly supported to prevent any piping loads from being placed on the pump.
9. Check alignment of pipes to pump to avoid strains which might later cause misalignment. See Figure 1. Unbolt flanges or break union joints. Pipes must not spring away or drop down. After pump has been in operation for a week or two, completely recheck alignment.

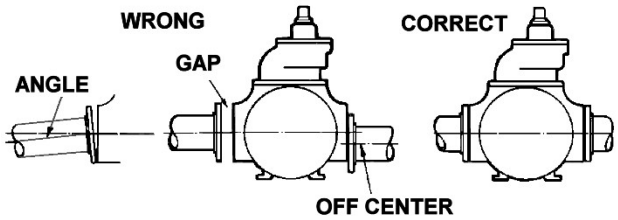

Figure 1

10. When pumping liquids at elevated temperature, make provisions to compensate for expansion and contraction of the pipes, especially when long pipe lines are necessary. Steel pipe expands approximately 3/4” (1.9 cm) per 100 feet (30.49 m) per 100°F (37.8°C) rise in temperature.

PUMP MOUNTING

A solid foundation reduces noise and vibration, and will improve pump performance. On permanent installations it is recommended the pumping unit be secured by anchor bolts as shown in Figure 2. This arrangement allows for slight shifting of position to accommodate alignment with the mounting holes in the base plate.

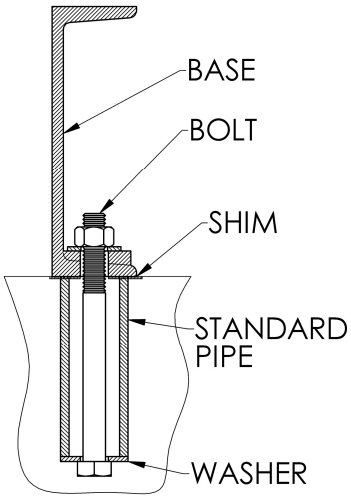

Figure 2 - Pipe Type Anchor Bolt Box

For new foundations, it is suggested that the anchor bolts be set in concrete. When pumps are to be located on existing concrete floors, drill holes into the concrete to hold the anchor bolts.

When installing units built on channel or structural steel type bases, use care to avoid twisting the base out of shape when anchor bolts are tightened. Use shims under the edges of the base prior to tightening the anchor bolts to level the base and prevent distortion.

INSTALLATION

COUPLING ALIGNMENT

The pump must be directly coupled to a gear and/or driver with a flexible coupling. Verify coupling alignment after installation of new or rebuilt pumps. Both angular and parallel coupling alignment MUST be maintained between the pump, gear, motor, etc. in accordance with manufacturer's instructions. See Figure 3.

1. Parallel alignment: The use of a laser alignment tool or dial indicator is preferred. If a laser alignment tool or dial indicator is not available, use a straightedge. Turn both shafts by hand, checking the reading through one complete revolution. Maximum offset must be less than .005" (.127 mm).
2. Angular alignment: Insert a feeler gauge between the coupling halves. Check the spacing at 90° increments around the coupling (four checkpoints). Maximum variation must not exceed .005" (.127 mm). Some laser alignment tools will check angular alignment as well.
3. Replace the coupling guards after setting alignment.

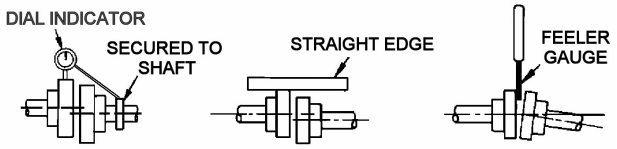

Figure 3 – Alignment Check

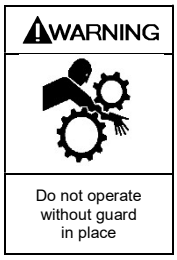

Operation without guards in place can cause serious personal injury, major property damage, or death.

PUMP ROTATION

NOTICE:

Confirm correct pump rotation by checking the pump rotation arrows respective to piping flow direction. Do not operate the pump in reverse rotation to reverse the direction of flow.

1. Determine direction of flow where the pump will be installed.
2. Confirm pump is installed in piping so that the flow will pass through the pump from inlet to outlet. The inlet of the pump has "INLET" cast in the cylinder and the outlet has "OUTLET" cast in the cylinder.
3. Briefly "jog" pump with pump driver. Check rotation of pump driver with respect to rotation arrow on pump.

A right-hand pump rotates clockwise with the intake on the right side, when viewed from the driven end.

A left-hand pump rotates counterclockwise with the intake on the left side, when viewed from the driven end.

TO CHANGE PUMP ROTATION

To reverse rotation, the pump must be disassembled then reassembled with the shaft on the opposite side of the pump. See the 'Maintenance' section for instructions.

CHECK VALVES

The use of check valves or foot valves in the supply tank is not recommended with self-priming, positive displacement pumps.

If the possibility of liquid backflow exists when the pump is off, a check valve in the pump discharge piping is recommended because the pump can motor in the reverse rotation and create undue stress on all attached components. Never start a pump when it is rotating in the reverse rotation as the added starting torque can damage the pump and related equipment. If a check valve is used, install it at the pump discharge.

OPERATION

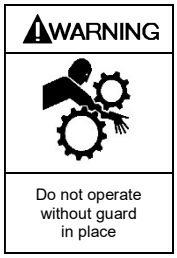

Operation without guards in place can cause serious personal injury, major property damage, or death.

Disconnecting fluid or pressure containment components during pump operation can cause serious personal injury, death or major property damage

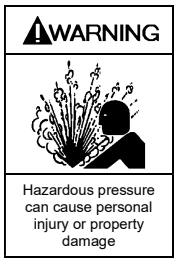

Failure to relieve system pressure prior to performing pump service or maintenance can cause personal injury or property damage.

Pumps operating against a closed valve can cause system failure, personal injury and property damage

PRE-START UP CHECK LIST

1. Check the alignment of the pipes to the pump. Support pipes so that they do not spring away or drop down when pump flanges or union joints are disconnected.
2. Verify proper coupling alignment.
3. Blackmer helical gear reducers (if supplied) are shipped from the factory without oil in the gearcase. Fill with the grade of oil indicated on the reducer tag. For more specific instructions on Blackmer gear reducers, refer to the appropriate Gear reducer Installation, Operation and Instruction Manual.
4. Check the entire pumping system to verify that the proper inlet and discharge valves are fully open, and that the drain valves and other auxiliary valves are closed.
5. Install vacuum and pressure gauges on the pump in the connections provided. These can be used to check actual suction and discharge conditions after pump start-up.
6. Check the wiring of the motor, and briefly turn on the power to make sure that the pump rotates in the direction of the rotation arrow.

START UP PROCEDURES

NOTICE:

Consult the "General Pump Troubleshooting" section of this manual if experiencing difficulties during start up.

1. Start the motor. Priming should occur within one minute.
2. Check the vacuum and pressure gauges to see if the pump is operating within the expected conditions.
3. Check for leakage from the piping and equipment.
4. Check for overheating, excessive noise or vibration of the pump, reducer, and motor.
5. Check the flow rate to ensure the pump is operating within the expected parameters. Record flow rate in the "initial Start Up Information" section.
6. Check the pressure setting of the relief valve by briefly closing a valve in the discharge line and reading the pressure gauge. This pressure should be 20 psi (1.4 bar) higher than the maximum operating pressure.

   CAUTION: Do not run the pump for more than 15 seconds with the discharge valve completely closed. If adjustments need to be made, refer to "Relief Valve Setting & Adjustment."

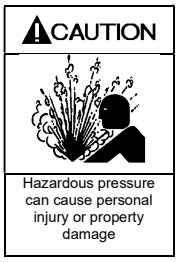

Incorrect settings of the pressure relief valve can cause pump component failure, personal injury, and property damage.

OPERATION

RUNNING THE PUMP IN REVERSE ROTATION

NOTICE:

When pumps are operated in reverse a separate pressure relief valve must be installed to protect the pump from excessive pressure.

It may be desirable to run the pump in reverse rotation for system maintenance. The pump will operate satisfactorily in reverse rotation for a LIMITED time, **at a reduced performance level.**

FLUSHING THE PUMP

NOTICE:

If flushing fluid is to be left in the pump for an extended time, it must be a lubricating, non-corrosive fluid. If a corrosive or non-lubricating fluid is used, it must be flushed from the pump immediately.

1. To flush the pump, run the pump with the discharge valve open and the intake valve closed. Bleed air into the pump through the intake gauge plug hole or through a larger auxiliary fitting in the intake piping. Pump air for 30 second intervals to clean out most of the pumpage. A drain plug is provided on the bottom of the cylinder, near the discharge port to facilitate cleaning.
2. Run a system compatible flushing fluid through the pump for one minute to clear out the remainder of the original pumpage. Restrict a valve in the discharge line to build up 10 psi (0.7 bar) to force flushing liquid through the bearing seal chamber.
3. To flush out the pressure relief valve, close the valve in the discharge line for 15 seconds while pumping the flushing liquid.
4. If necessary, repeat steps 2 and 3.
5. To remove the flushing fluid, follow step 1 above.

NOTICE:

After flushing the pump some residual fluid will remain in the pump and piping.

NOTICE:

Properly dispose of all waste fluids in accordance with the appropriate codes and regulations.

PUMP RELIEF VALVE

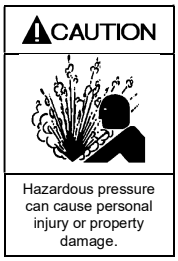

Incorrect bypass valve or internal relief valve settings can cause pump component failure, personal injury, and property damage.

NOTICE:

The pump internal relief valve is designed to protect the pump from excessive pressure and must not be used as a system pressure control valve.

Pumping volatile liquids under suction lift may cause cavitation. DO NOT partially close the discharge valve. This WILL result in internal relief valve chatter. For these applications, install an external bypass valve, and any necessary piping, back to the storage tank. Use a bypass system when operating for more than 1 minute (15 seconds if a check valve is used in the suction line) against a closed discharge valve.

RELIEF VALVE SETTING AND ADJUSTMENT

The relief valve pressure setting is marked on a metal tag attached to the valve cover. Set the relief valve at least 15 - 20 psi (1.0 - 1.4 Bar) higher than the operating pressure, or the external bypass valve setting (if equipped).

Incorrect settings of the pressure relief valve can cause pump component failure, personal injury, and property damage.

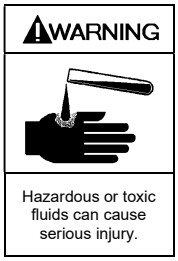

Relief valve cap is exposed to pumpage and will contain some fluid

DO NOT remove the R /V Cap OR adjust the relief valve pressure setting while the pump is in operation.

1. **To INCREASE the pressure setting,** remove the relief valve cap (1), and turn the adjusting screw *inwar*d (clockwise). Retighten the locknut and replace the valve cap.
2. **To DECREASE the pressure settin**g, remove the relief valve cap (1), and turn the adjusting screw *outwar*d (counterclockwise). Retighten the locknut and replace the valve cap.

Refer to the individual Blackmer pump parts lists for various spring pressure ranges. Unless specified otherwise, pumps are supplied from the factory with the relief valve adjusted to the mid-point of the spring range.

MAINTENANCE

WARNING

Hazardous machinery can cause serious personal injury.

Failure to disconnect and lockout electrical power or engine drive before attempting maintenance can cause severe personal injury or death

WARNING

Hazardous pressure can cause personal injury or property damage

Failure to relieve system pressure prior to performing pump service or maintenance can cause personal injury or property damage.

WARNING

Hazardous voltage. Can shock, burn or cause death.

Failure to disconnect and lockout electrical power before attempting maintenance can cause shock, burns or death

WARNING

Hazardous pressure can cause personal injury or property damage

Disconnecting fluid or pressure containment components during pump operation can cause serious personal injury, death or major property damage

WARNING

Hazardous or toxic fluids can cause serious injury.

If pumping hazardous or toxic fluids, system must be flushed and decontaminated, inside and out, prior to performing service or maintenance

NOTICE:

Maintenance shall be performed by qualified technicians only. Following the appropriate procedures and warnings as presented in this manual.

STRAINERS

Strainers must be cleaned regularly to avoid pump starvation. Schedule will depend upon the application and conditions.

LUBRICATION

NOTICE:

To avoid possible entanglement in moving parts do not lubricate the pump, gear reducer or any other parts while the pump is running.

NOTICE:

If pumps are repainted in the field, ensure that the grease relief fittings (76A) are functioning properly after painting. Do NOT paint them closed. Remove any excess paint from the fittings.

Lubricate the ball bearings, and motor couplings (if required), every three months at a minimum

Recommended Grease:
Mobil® - Mobilgrease XHP222,
Exxon® - RONNEX MP Grease,
or equivalent.

Greasing Procedure:

1. Remove the grease relief fittings (76A) from the bearing covers (27A).
2. Apply grease with a hand gun until grease begins to escape from the grease relief fitting port.
3. Replace the grease relief fittings (76A).

DO NOT over grease pump bearings. While it is normal for some grease to escape from the grease tell-tale hole after lubrication, excessive grease on pumps equipped with mechanical seals can cause seal failure.

VANE REPLACEMENT

NOTICE:

Maintenance shall be performed by qualified technicians only. Follow the appropriate procedures and warnings as presented in manual.

1. Remove the head assembly and all other parts on the outboard (non-driven) side of the pump. See the "Pump Disassembly" Section.
2. Turn the shaft by hand until a vane (14) comes to the top (12 o'clock) position of the rotor.

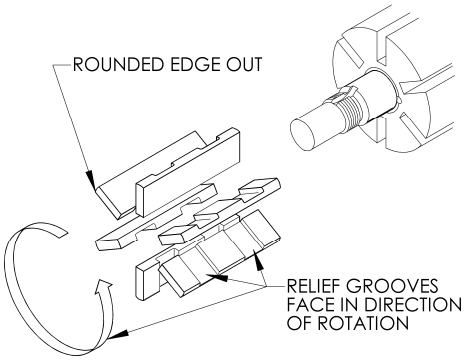

Figure 5 – Vane Replacement

3. Remove and replace the vane, making sure to install the vane with the rounded edge outward to contact the cylinder and the relief grooves are facing towards the direction of rotation.

4. Rotate the shaft until the next rotor slot is in the top position, and replace the vane.
5. Continue this procedure until all new vanes are in place.
6. Reassemble the pump as instructed in "Pump Assembly."

MAINTENANCE

PUMP DISASSEMBLY

NOTICE:

Follow all hazard warnings and instructions provided in the "maintenance" section of this manual.

NOTE: The numbers in parentheses following individual parts indicate reference numbers on the Pump Parts List.

1. Drain and flush the pump and system as required.
2. Starting on the **inboard** (driven) end of the pump, clean the pump shaft thoroughly, making sure the shaft is free of nicks and burrs. This will prevent damage to the mechanical seal when the inboard head assembly is removed.
3. Remove the inboard bearing cover capscrews (28) and slide the inboard bearing cover (27A) and gasket (26) off the shaft. Discard the bearing cover gasket.
4. Remove the outboard bearing cover capscrews (28) and slide the outboard bearing cover (27A) and gasket (26) off the shaft. Discard the bearing cover gasket.
5. To remove the locknuts and lockwashers (24A and 24B):
   a. Bend up the engaged lockwasher tang and loosen the set screw (24C) in the lock nut.
   b. Rotate the locknut (24A) counterclockwise to remove it from the shaft.
   c. Slide the lockwasher (24B) off the shaft. Inspect the lockwasher for damage and replace as required.
   d. Repeat steps a, b and c on the opposite shaft end.
6. Remove the head capscrews (21) and carefully pry the head (20) away from the cylinder. Jack screw holes are provided if needed.
7. Slide the head off the shaft. The head O-ring (72), bearing (24), and mechanical seal (153) will come off with the head assembly. Remove and discard the head O-ring.
   a. Pull the bearing (24) from the housing in the head.
   b. To remove the **mechanical seal** (153), use two screw drivers to gently push the backside of the seal jacket to push the seal from the head (see Figure 6). Use care when placing the screwdrivers to prevent damage to the seal faces. Remove and discard mechanical seal O-rings.

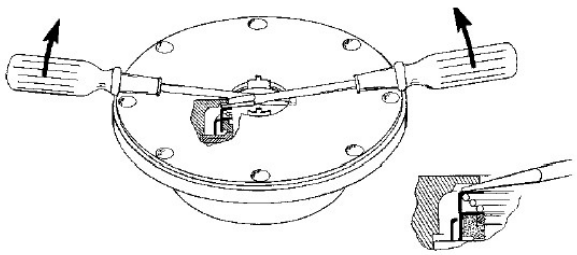

Figure 6

8. Pull the rotor and shaft (13) from the cylinder. While one hand is pulling the shaft, the other hand should be cupped underneath the rotor to prevent the vanes (14) and push rods (77) from falling out. Carefully set the rotor and shaft, vanes and push rods aside for future vane replacement and reassembly.
9. Remove the remaining components from the outboard side of the pump, as instructed above.

PARTS REPLACEMENT

1. If any of the O-rings have been removed or disturbed during disassembly, they must be replaced with new O-rings. **NOTE:** PTFE O-rings should be heated in hot water to aid installation.
2. Excessive or continuous leakage around the pump shaft may be an indication of a damaged mechanical seal. If a mechanical seal has been leaking, it is recommended the entire seal be replaced. Refer to "General Pump Troubleshooting" for possible causes of seal leakage.

PUMP ASSEMBLY

Before reassembling the pump, inspect all component parts for wear or damage, and replace as required. Wash out the bearing/seal recess of the head and remove any burrs or nicks from the rotor and shaft.

1. **Reassemble the OUTBOARD side of the pump first:**
   For a CLOCKWISE rotation pump, position the pump cylinder with the INTAKE port to the **left.**
   For a COUNTERCLOCKWISE rotation pump, position the pump cylinder with the INTAKE port to the **right.**
2. Install a new head O-ring (72) in the groove in the head. Note: For ease of installation, soak the head O-ring in 200°F (93°C) water.
3. Install the head (20) on the outboard side of the cylinder. Install and uniformly tighten four head capscrews (21) 90° apart; torque to 25 lbs. ft (34 Nm).
4. **MECHANICAL SEAL**
   Apply a small amount of motor oil in the head recess. Push the mechanical seal assembly (153) into the recess of the head with seal jacket drive tangs inward. The pin in the stationary seat must be between the lugs in the back of the head recess.
5. Hand pack the ball bearing (24) with grease. Refer to the "Lubrication" section for the recommended grease.
6. Install the bearing into the head recess with the bearing balls facing outward, and the grease shield inward. Ensure the bearing is fully and squarely seated against the mechanical seal. Install two 3/8" (10 mm) washers and two bearing cover capscrews (28) to clamp the bearing for proper bearing locknut adjustment (see Figure 7). The washers and capscrews will be removed after the locknuts are adjusted. Leave the two capscrews and washer in place to retain the bearing during assembly.

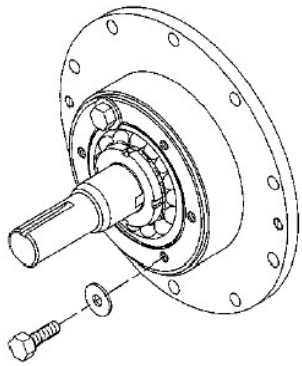

Figure 7 Clamping the Bearing

7. Turn the pump cylinder around and begin assembly on the opposite, inboard end.

8. Inspect the vanes (14) and push rods (77) for wear and damage, and replace as follows:
   a. Partially install the non-driven end of the rotor and shaft (13) into the open side of the pump cylinder.
   b. Leave part of the rotor outside of the cylinder so that the bottom vanes can be installed and held in place as the push rods are installed in the push rod holes of the rotor. Insert the new vanes into the rotor slots with the rounded edges outward, and the vane relief grooves facing TOWARDS the direction of rotation. See Figure 4.
   c. After the bottom vanes and push rods are installed, insert the rotor and shaft fully into the cylinder.
   d. Install the remaining vanes into the top positions of the rotor. **Rotate the shaft by hand to engage the drive tangs of the seal jacket in the rotor slots.**
9. Install the inboard head, mechanical seal and bearing as instructed in steps 2 through 6. Apply a thin coating of motor oil on the inboard shaft to aid installation.
10. Rotate the shaft by hand to engage the mechanical seal drive tangs and to test for binding or tight spots. If the rotor does not turn freely, lightly tap the rims of the heads with a soft faced mallet until the correct position is found. Install all of the remaining head capscrews for each head and uniformly torque to 25 lbs. ft (34 Nm).
11. **LOCKNUT INSTALLATION**
    The bearing locknuts (24A) and lockwashers (24B) MUST be installed and adjusted properly. Overtightening locknuts can cause bearing failure or a broken lockwasher tang. Loose locknuts will allow the rotor to shift against the heads, causing wear. See Figure 10.
    a. On both ends of the pump shaft, install a lockwasher (24B) with the tangs facing outward, followed by a locknut (24A) with the tapered end inward. Ensure the inner tang "A" of the lockwasher is located in the slot in the shaft threads, bending it slightly, if necessary.
    b. Tighten both locknuts to ensure that the bearings are bottomed in the head recess. DO NOT overtighten and bend or shear the lockwasher inner tang.
    c. Loosen both locknuts one complete turn.
    d. Tighten one locknut until a slight rotor drag is felt when turning the shaft by hand.
    e. Back off the nut the width of one lockwasher tang "B". Secure the nut by bending the closest aligned lockwasher tang into the slot in the locknut. The pump should turn freely when rotated by hand.
    f. Tighten the opposite locknut by hand until it is snug against the bearing. Then, using a spanner wrench, tighten the nut the width of one lockwasher tang. Tighten just past the desired tang, then back off the nut to align the tang with the locknut slot. Secure the nut by bending the aligned lockwasher tang into the slot in the locknut. The pump should continue to turn freely when rotated by hand.
    g. To check adjustment, grasp the nut and washer with fingers and rotate back and forth. If this cannot be done, one or both locknuts are too tight and should be alternately loosened one stop at a time (.001"). Begin by loosening the locknut adjusted last.
    h. After adjustment is complete, tighten the locknut set screws (24C) securely. Remove the bearing cover capscrews and 3/8" washers from both ends of the pump.

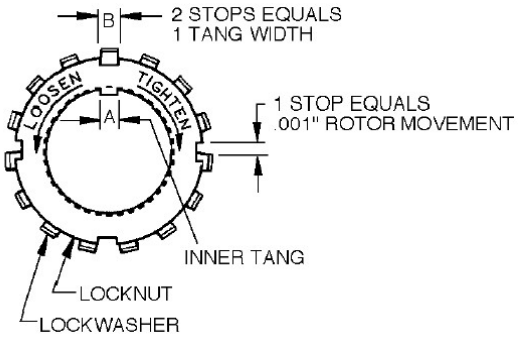

Figure 10 Locknut Adjustment

12. Inspect the grease seal (104) for wear or damage and replace as required. Grease the outside diameter of the grease seal and push it into the bearing cover (27A) with the lip of the seal inward. The lip will face outward when the bearing cover is installed on the head
13. Attach a new bearing cover gasket (26) and the bearing cover to the head. Install and torque the bearing cover capscrews (28) to 15 lbs. ft (20 Nm).
14. Follow step and 13 to install the bearing cover (27) on the outboard side of the pump.
15. **RELIEF VALVE ASSEMBLY**
    a. Insert the valve (9) into the relief valve bore of the cylinder with the fluted end inward.
    b. Install the relief valve spring (8) and spring guide (7) against the valve.
    c. Attach a new relief valve gasket (10) and the valve cover (4) on the cylinder.
    d. Screw the relief valve adjusting screw (2) into the valve cover until it makes contact with the spring guide (7).

NOTICE:

The relief valve setting MUST be tested and adjusted more precisely before putting the pump into service. Refer to "Relief Valve Setting and Adjustment"

    e. Install the relief valve cap (1) and gasket (88) after the relief valve has been precisely adjusted.
16. Reinstall coupling, shaft key, and coupling guards.

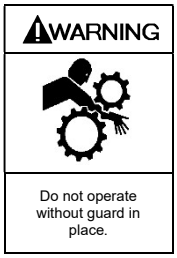

Operation without guards in place can cause serious personal injury, major property damage, or death.

17. Refer to “Pre-Start Up Check List” and “Start Up Procedures” sections of this manual prior to pump operation.

TROUBLESHOOTING

NOTICE:
Maintenance shall be performed by qualified technicians only, following the appropriate procedures and warnings as presented in this manual.

LEAKAGE

Location	Probable Cause/Corrective Action
Between the head & cylinder	Damaged head O-ring: Inspect and replace if necessary. Burrs/dirt in head O-ring groove or cylinder: File and clean as necessary.
Around the shaft	New Mechanical Seals: New seals may leak slightly at start up, but should seal up shortly thereafter. Damaged mechanical seals: Check for damaged O-rings or cracked, scratched or worn seal faces

SHAFT BINDING

Probable Cause	Corrective Action
Burrs, dirt or foreign particles on the heads.	During assembly, both heads must be clean and smooth. File any burrs or rough spots, and wipe the heads with a clean cloth and alcohol to remove any dirt or foreign particles.

Other possible causes of shaft binding ----------

- Foreign particles on rotor or vanes.
- Damaged vanes or rotor.
- Bent push rods.
- Liquids that "set up" when inactive.

OVERHEATING

Location	Probable Cause/Corrective Action
Internal relief valve.	**Continual, full bypassing of the liquid:** Properly adjust the relief valve so that the pump will not bypass during normal operation. **WARNING: Internal bypassing of liquid elevates the liquid temperature. Only use the internal bypass valve for brief periods and at differential pressures below 125 psi.** **For extended periods of higher pressures, the internal bypass port must be plugged and the liquid returned back to the source.**

Other possible causes of overheating ----------

- Improper relief valve adjustment (See "Relief Valve").
- Plugged discharge line.
- Closed valve.

LOW DELIVERY RATE

Probable Cause	Corrective Action
Relief valve setting too low, causing the liquid to bypass.	Set the relief valve 20 psi (1.4 bar) higher than the differential pressure.

Other possible causes of a low delivery rate ----------

- Restriction in the suction line.
- Resistance in the discharge line.
- Air leaks in the suction line.
- Damaged or worn pump parts.
- Vanes installed incorrectly (see Vane Replacement)
- Pump speed too low or too high.
- Relief valve leaking.
- Relief valve sticking open, or not properly seating.
- Dirty strainer.

EXCESSIVE NOISE AND VIBRATION

Probable Cause	Corrective Action
Cavitation or vaporization of the liquid resulting from excessive vacuum on the pump due to starved suction.	Check for: • Inlet piping too long or too small in diameter. • Strainer plugged or dirty. • Undersized or restrictive fittings, such as globe valves or partially closed valves. • Excessive amount of elbows. • Suction lift too great. • Pump speed too high for the viscosity of the liquid being pumped.
Entrained air or vapors in the pump.	Check pipe joints for leakage of air. Sometimes when recirculating liquid in a tank, the returning liquid falling through the air carries air down into the tank, which eventually gets back into the pump.
Pump speeds exceed the recommended maximum.	Check the recommended RPM for your specific application.
Continual or long term bypassing of liquid through relief valve.	Check for restriction in the discharge line, or an improper relief valve adjustment (See "Relief Valve" on Page 6).

Other possible causes of noise and vibration ----------

- Excessively worn vanes.
- Bearing Worn or Damaged.
- Loose or improperly installed piping.
- Misalignment of pump and driver.
- Pump base not properly mounted.
- Insufficient Oil in the Gear Reducer

POOR OR NO PRIMING

Probable Cause

- Air leaks in the suction line.
- Restriction in the suction line.
- Damaged or worn pump parts.
- Too much lift for the vapor pressure of the fluid.
- A dirty or clogged strainer.
- Worn vanes.
- Suction Valve Closed.
- Incorrect pump rotation
- Relief Valve partially open, valve not seating properly.

DAMAGED VANES

Probable Cause

- Foreign objects entering the pump.
- Running the pump dry for extended periods of time.
- Cavitation.
- Viscosity too high for the vanes and /or the pump speed.
- Incompatibility with the liquids pumped.
- Excessive heat.
- Worn or bent push rods, or worn push rod holes.
- Settled or solidified material in the pump at start-up.
- Hydraulic hammer - pressure spikes.
- Vanes installed incorrectly (see"Vane Replacement").

BROKEN SHAFT

Probable Cause

- Foreign objects entering the pump.
- Viscosity too high for the pump speed.
- Relief valve not opening.
- Hydraulic hammer - pressure spikes.
- Pump/driver, driveline/drive shaft misalignment.
- Excessively worn vanes or vane slots.
- Settled or solidified material in the pump at start-up.
- Overtightened V-belts, if used.

SEAL LEAKAGE

Probable Cause

- O-rings not compatible with the liquids pumped.
- O-rings nicked, cut or twisted.
- Shaft at seal area damaged, worn or dirty.
- Excessive cavitation.
- Mechanical seal faces cracked, scratched, pitted or dirty.
- Ball bearings overgreased.

MOTOR OVERLOAD

Probable Cause

- Horsepower of motor not sufficient for application
- Improper wire size / wiring and/or voltage to motor.
- Misalignment in pump drive system.
- Excessive viscosity, pressure or speed.
- Faulty or worn bearings.
- Rotor rubbing against head or cylinder.
- Dirty mechanical seal faces.

1809 Century Avenue, Grand Rapids, Michigan 49503-1530 U.S.A.
Telephone: (616) 241-1611 • Fax: (616) 241-3752
E-mail: blackmer @blackmer.com • Internet Address: www .blackmer.com