Blackmer www.blackmer.com	TYPE	MODEL	DIMENSIONS 109-102
	HELICAL GEAR REDUCER	HRA	Section 100 Effective Feb 2010 Replaces March 2003

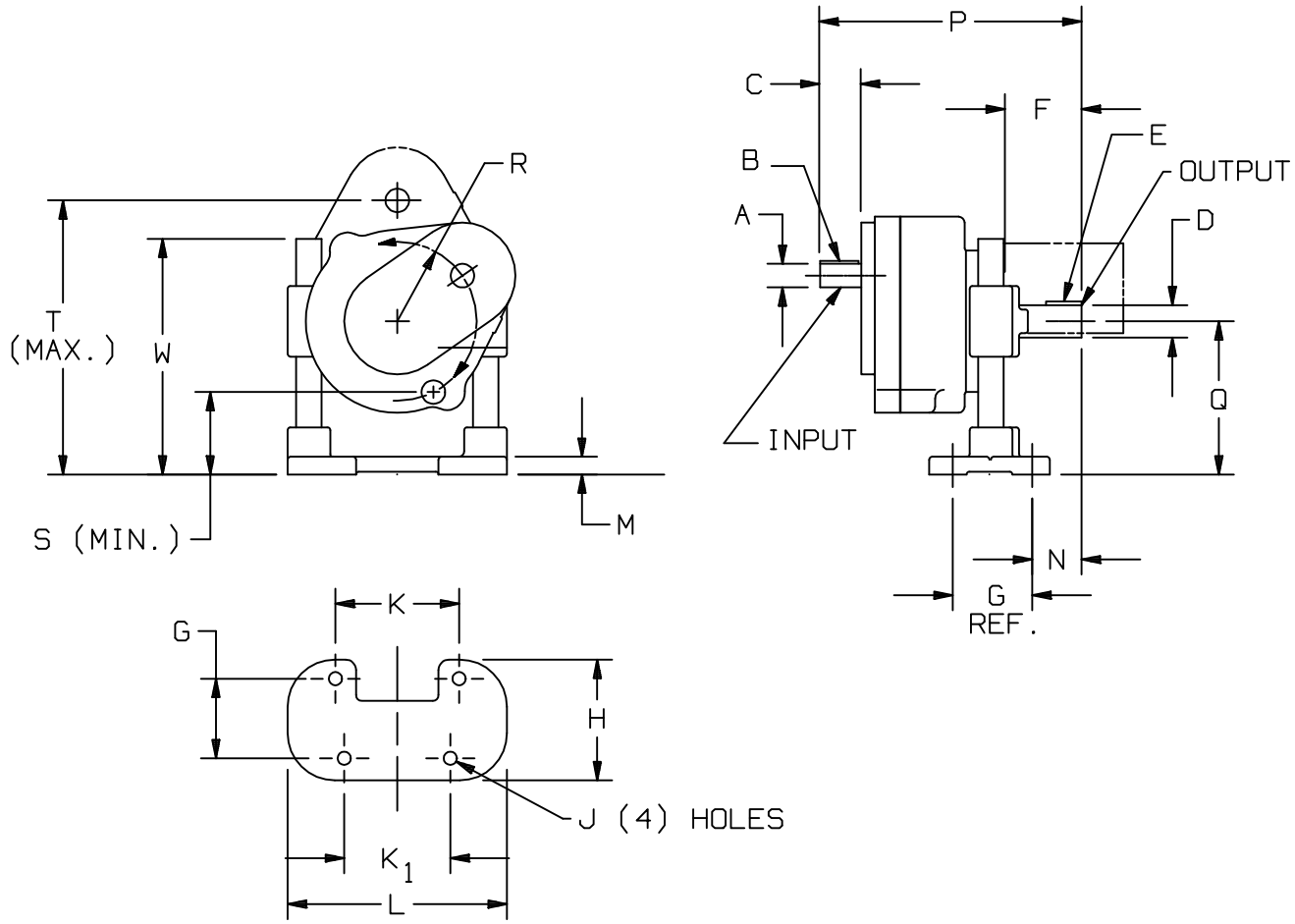

DIM TOLERANCE ±.13

			UNITS	DIMENSIONS									
				A	B	C	D	E	F	G	H	J	K
			IN	1	1/4	1 3/4	1 3/8	5/16	3 1/4	3 3/8	5 1/8	9/16	5 1/4
			MM	25,4	6,4	44,5	34,9	7,9	82,6	85,7	130,2	14,3	133,4
				K_1	L	M	N	P	Q		R	S	T
			IN	4 1/2	9 5/16	3/4	2 1/8	11 1/8	5 TO 8 1/4		3 3/8	3 1/2	11 5/8
			MM	114,3	236,5	19,0	54,0	282,6	127 TO 209,6		85,7	88,9	295,3
				U	V	W	X	Y	Z				
			IN	——	——	10	——	——	——				
			MM	——	——	254	——	——	——				
				WEIGHT									
			LBS	60									
			KG	27,2									