Blackmer www.blackmer.com	TYPE	SIZE	UNIT STYLE	DIMENSIONS 108-115
	SMVP 200C	3.0	PO	Section 100 Effective JULY 2015 Replaces MAY 2007 Page 1 / 2

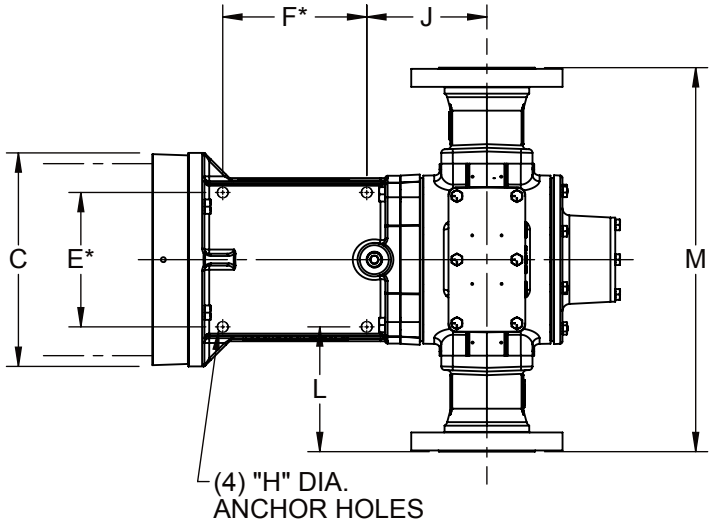

RIGHT HAND ROTATION

BLACKMER FLANGE TYPE	UNITS	W	M
3" ANSI R.F. 150 LBS.	IN	5	20
	MM	127	508
3" WELD	IN	1-1/4	12-1/2
	MM	31,8	317,5

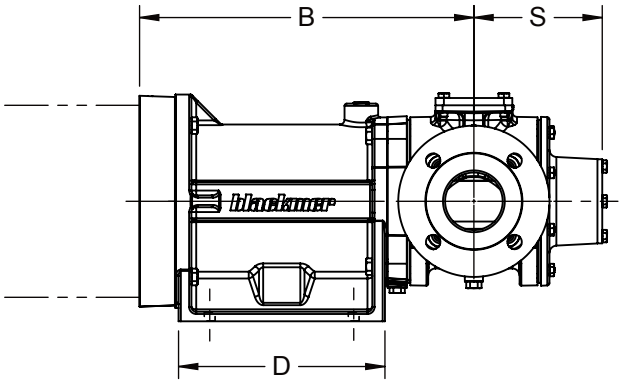

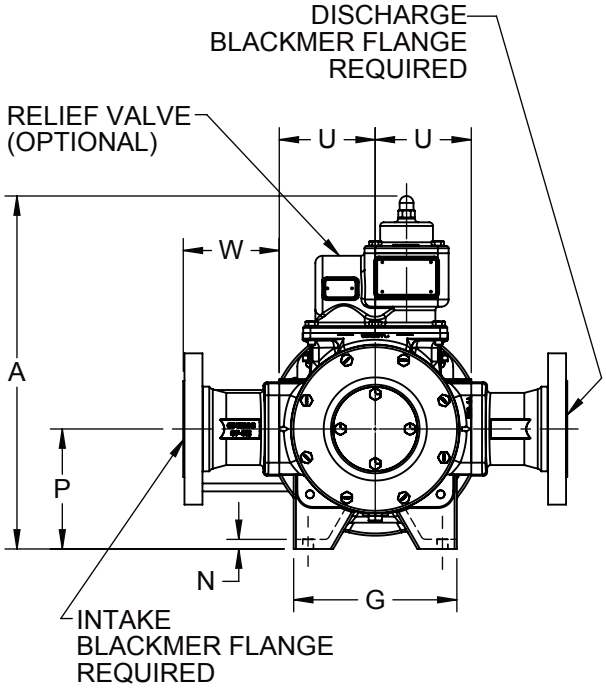

* TOLERANCE ±1/8
TOLERANCE ON OTHER DIMENSIONS ±1/4

MOTOR		DIMENSIONS														UNIT WEIGHT	
FRAME SIZE	UNITS	A	B	C	D	E	F	G	H	J	L	N	P	S	U	UNITS	W / O MOTOR
254TC	IN	18.50	17.63	11.13	10.75	7.00	7.50	8.50	.56	6.25	6.50	.50	6.25	6.88	5.00	LBS	340
256TC	MM	469,9	447,7	282,4	273,1	177,8	190,5	215,9	14,3	158,8	165,1	12,7	158,8	174,6	127	KG	154,4
284TC	IN	18.50	18.13	11.13	10.75	7.00	7.50	8.50	.56	6.25	6.50	.50	6.25	6.88	5.00	LBS	350
286TC	MM	469,9	460,4	282,4	273,1	177,8	190,5	215,9	14,3	158,8	165,1	12,7	158,8	174,6	127	KG	158,9
	IN															LBS	
	MM															KG	
	IN																
	MM																

www.blackmer.com	MOTOR COUPLING ADAPTER	DIMENSIONS 108-115
	SMVP 200C / MCA280TC	Section 100
		Effective JULY 2015
		Replaces MAY 2007
		Page 2 / 2

RIGHT HAND ROTATION

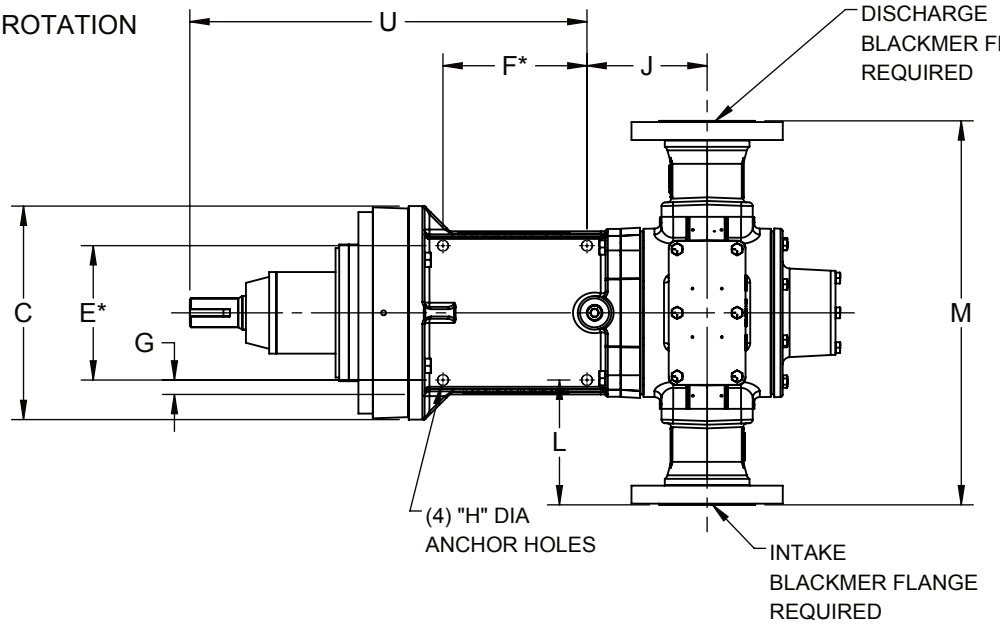

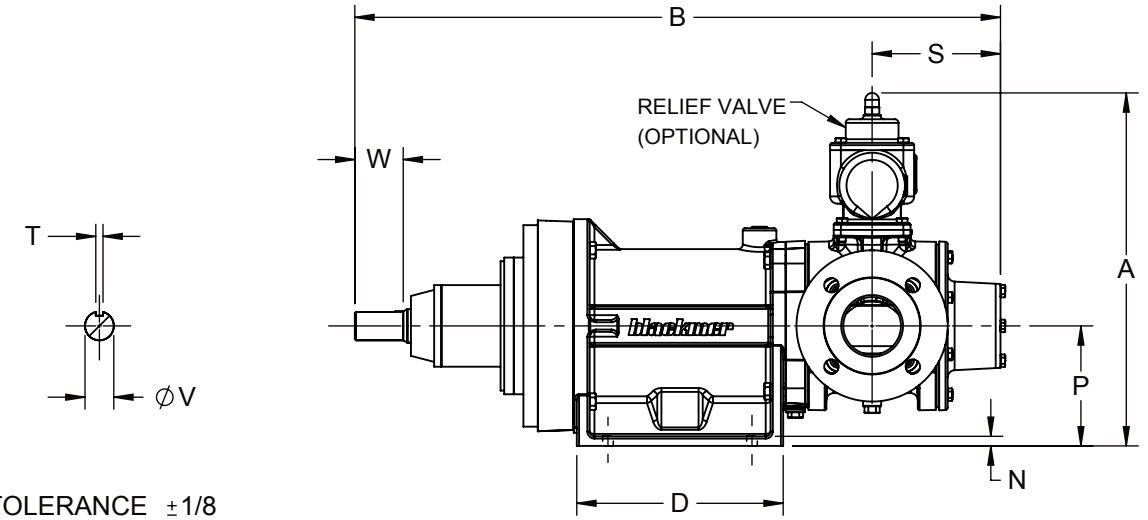

* TOLERANCE ±1/8
TOLERANCE ON OTHER DIMENSIONS ±1/4

		DIMENSIONS																		UNIT WEIGHT	
	UNITS	A	B	C	D	E	F	G	H	J	L	M	N	P	S	T	U	V	W	UNITS	
	IN	18.50	34.25	11.13	10.75	7.00	7.50	.75	.56	6.25	6.50	20.00	.50	6.25	6.88	.38	21.13	1.50	2.50	LBS	370
	MM	469,9	870	282,4	273,1	177,8	190,5	19,1	14,3	158,8	165,1	508	12,7	158,8	174,6	9,5	536,6	38,1	63,5	KG	168,2
	IN																				
	MM																				