TYPE	SIZE	UNIT STYLE
HXLJ	8G	PO

DIMENSIONS 102-105

Effective October 2002
Replaces July 1999

www.blackmer.com

RIGHT HAND ROTATION, FOR LEFT HAND ROTATION, SHAFT PROJECTION IS OPPOSITE THAT SHOWN.

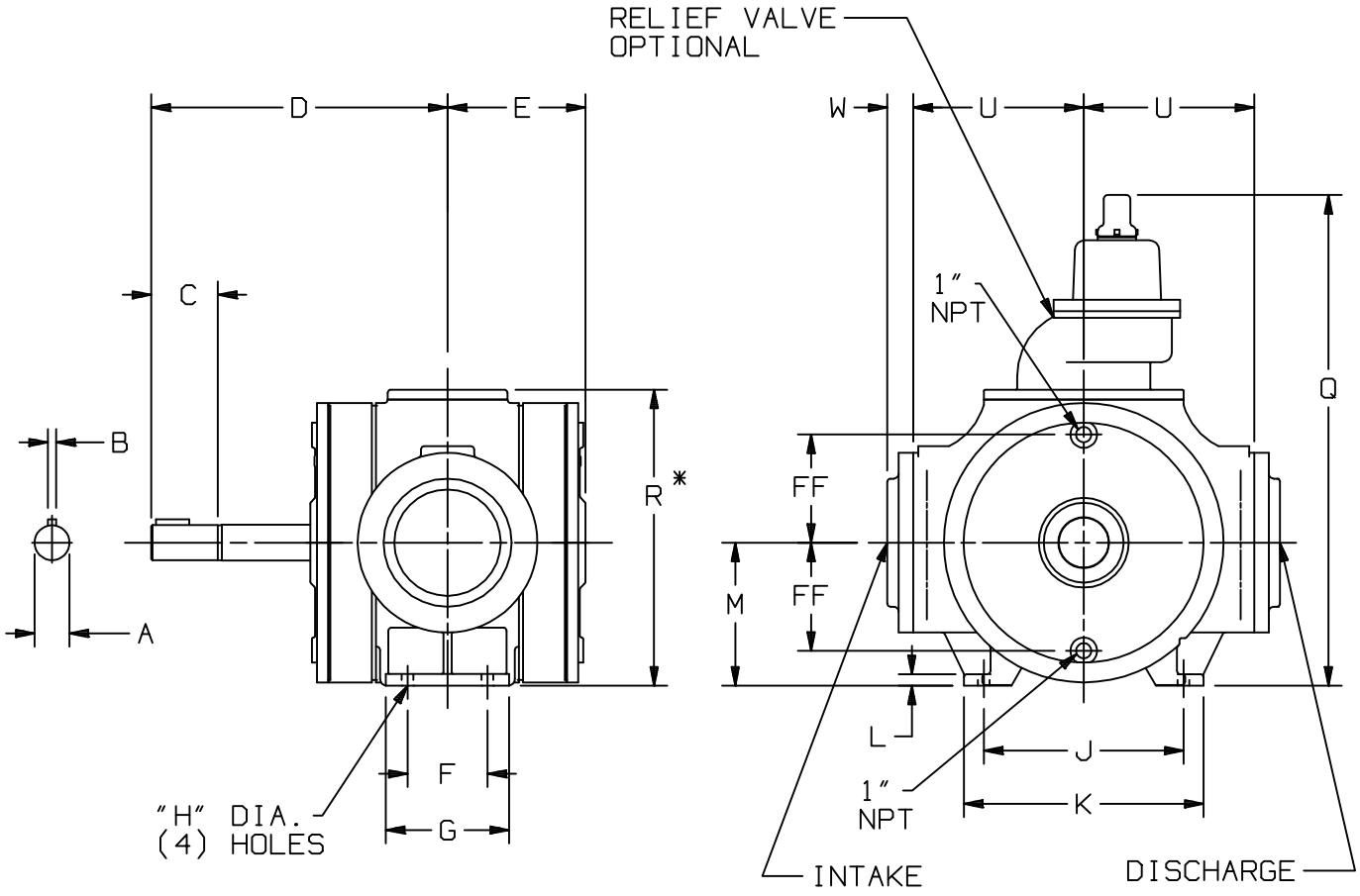

PUMP FLANGES ARE 8" ANSI COMPATIBLE
* PUMP HEIGHT LESS RELIEF VALVE

FRAME SIZE		UNITS	DIMENSIONS									
			A	B	C	D	E	F	G	H	J	K
		IN	2 5/8	5/8	5	22 1/4	10 3/8	6	9 1/4	7/8	15	18
		MM	66,7	15,9	127	565,2	263,5	152,4	235	22,2	381	457,2
			L	M	N	P	Q	R	S	T	U	V
		IN	7/8	10 3/4	—	—	36 7/8	22 3/4	—	—	12 13/16	—
		MM	22,2	273,1	—	—	936,6	577,9	—	—	325,4	—
			W	X	Y	Z	AA	BB	CC	DD	EE	FF
		IN	1 15/16	—	—	—	—	—	—	—	—	8 1/8
		MM	49,2	—	—	—	—	—	—	—	—	206,4